Brand of NTN corporation

Technical data

UCP218

Bearing units



Grey cast housing, radial insert ball bearing with socket set screws,seal with slinger

KIT CONTENT

UC218G2, P218

VISUAL (S)

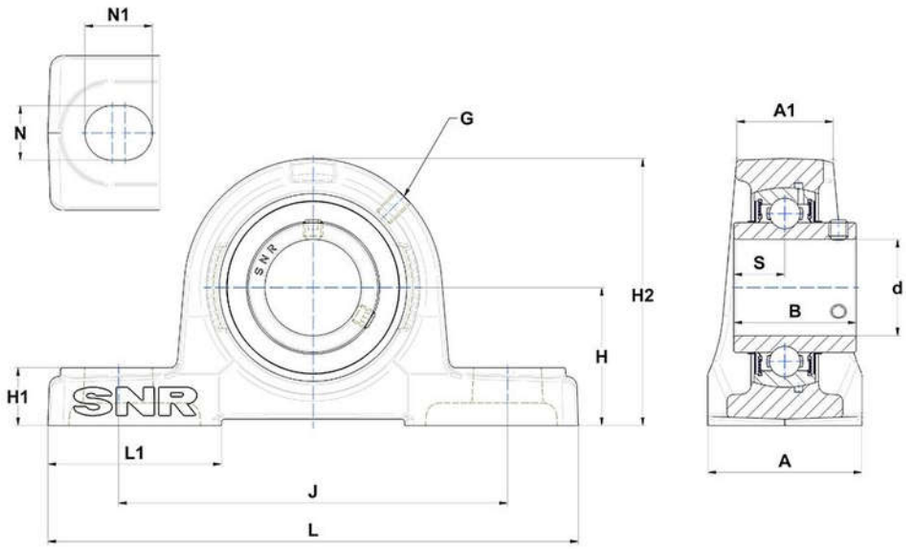

PRODUCT DEFINITION

Brand	SNR
A - Housing width	88 mm
A1 - Housing top width	55 mm
B - Width of Inner Ring	96 mm
d - Shaft diameter	90 mm
G - Grease fitting	M10x1

PRODUCT DEFINITION	
H - Distance mounting base to centerline spheric. seating diam.	101,6 mm
H1 - Housing foot height	34 mm
H2 - Housing height	200 mm
J - Mounting holes distance	262 mm
L - Housing length	327 mm
L1 - Housing foot length	100 mm
N - Mounting hole dimension	27 mm
N1 - Mounting hole length	33 mm
S - Distance front side/bearing centre	39,7 mm

PRODUCT PERFORMANCE	
C - Dynamic load rating	96000000 mN
C0 - Static load rating	71500000 mN
Operating temperature min.	253,15 °K
Operating temperature max.	373,15 °K

OTHER FEATURES	
Mass	13,45 kg
Recommended tightening torque for set screw	33 N-m