22N78 Athlonix Precious metal commutation Ø22mm 15.7 mNm

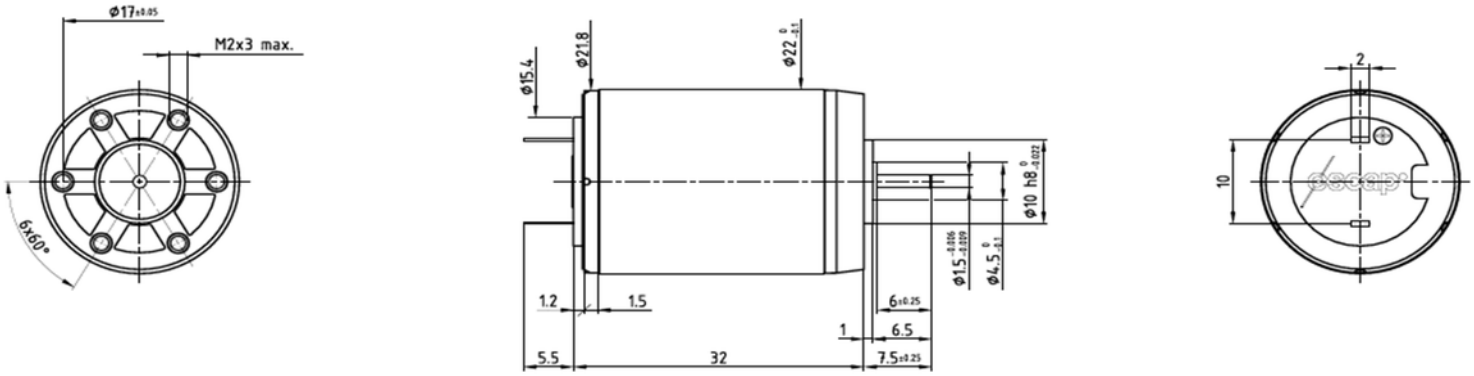

22N78 **** .1001

Electrical Data	****	319P	313P	311P	216E	215E	208E	
1 Nominal Voltage	V	6	9	12	18	24	48	Volt
2 No-Load Speed	n_0	8,660	6,860	7,280	8,250	9,075	6,350	rpm
3 No-Load Current	I_0	28.0	10.0	11.0	6.0	5.0	0.0	mA
4 Terminal Resistance	R	0.6	2.5	3.9	7.7	11.0	107.0	Ω
5 Output Power	$P_{2max.}$	13.0	12.0	12.0	11.3	11.5	10.0	W
6 Stall Torque	mNm	66 (9.35)	45 (6.38)	48 (6.8)	49 (6.94)	55 (7.79)	32 (4.54)	mNm (oz-in)
7 Efficiency	$\eta_{max.}$	90	90	88	90	91	91	%
8 Max continuous speed	$n_{e\ max.}$	12,000	12,000	12,000	12,000	12,000	12,000	rpm
9 Max continuous torque	$M_{e\ max.}$	15.7 (2.06)	14.5 (2.06)	14.8 (2.1)	13.8 (1.96)	14.5 (2.06)	12.9 (1.83)	mNm (oz-in)
10 Max continuous current	$I_{e\ max.}$	2.40	1.18	0.95	0.67	0.58	0.18	A
11 Back-EMF Constant	k_E	0.69	1.31	1.64	2.18	2.64	7.54	mV/rpm
12 Torque Constant	k_M	6.60	12.50	15.70	20.80	25.20	72.00	mNm/A
13 Motor Regulation	R/k^2	13.8	16.0	15.8	17.80	17.32	20.64	10^3/Nms
14 Friction Torque	T_F	0.07 (0.01)	0.25 (0.04)	0.11 (0.02)	0.12 (0.02)	0.12 (0.02)	0.07 (0.01)	mNm (oz-in)
15 Rotor Inductance	L	0.04	0.16	0.25	0.50	0.60	7.00	mH
16 Mechanical Time Constant	τ_m	6.7	7.0	6.6	8.4	7.8	6.9	ms
17 Rotor Inertia	J	4.90	4.39	4.20	4.74	4.50	3.32	$g.cm^2$
18 Thermal Resistance (rotor/body)	R_{th1} / R_{th2}	6/22	6/22	6/22	6/22	6/22	6/22	°C/W
19 Thermal Time Constant (rotor/stator)	τ_{w1}/t_{w2}	9/550	9/550	9/550	9/550	9/550	9/550	°C/W
20 Operating Temperature Range:	motor	-30°C to 85°C (-22°F to 185°F)						°C (°F)
	rotor	100°C (212°F)						°C (°F)
21 Shaft Load max.:		With sleeve bearings						
at 3,000 rpm (5mm from bearing)	-radial	3.0 (10.8)						N (oz)
at 3,000 rpm	-axial	150 (539.5)						N (oz)
22 Shaft play:	-radial	<0.03 (0.0012)						mm (inch)
	-axial	0.15 (0.0059)						mm (inch)
23 Weight	g	53 (1.87)						g (oz)

Execution			
Gearbox	**Single Shaft**	**MR2**	**E9**
	22N78	**22N98**	**22N98**
R22	1001	1008	1005
M22	1001	1008	1005
K24	1001	1008	1005
K27	1001	1008	1005

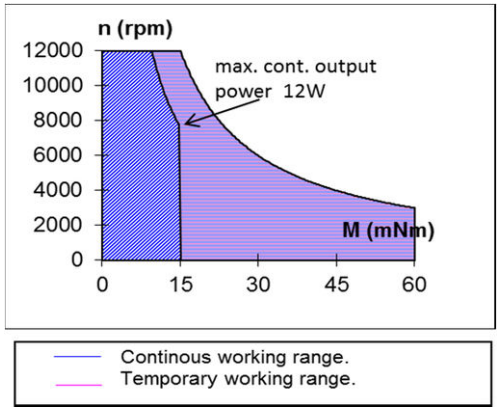

(C) 2013. Portescap. Specifications subject to change without notice.