

Image may differ from product. See technical specification for details.

NU 306 ECM

Single row cylindrical roller bearing, NU design

Single row cylindrical roller bearings are designed to accommodate high radial loads in combination with high speeds. Having two integral flanges on the outer ring and no flanges on the inner ring, NU design bearings can accommodate axial displacement in both

directions. An important feature is the separable design, which facilitates mounting and enables the bearing components to be interchanged.

- High radial load carrying capacity
- Low friction
- Long service life
- Accommodate axial displacement in both directions
- Separable design

Overview

Dimensions

Bore diameter	30 mm
Outside diameter	72 mm
Width	19 mm

Performance

Basic dynamic load rating	58.5 kN
Basic static load rating	48 kN
Reference speed	11 000 r/min
Limiting speed	12 000 r/min
SKF performance class	SKF Explorer

Properties

Bearing part	Complete bearing
Axial displacement capability	In both directions
Number of rows	1
Locating feature, bearing outer ring	None
Bore type	Cylindrical
Cage	Machined metal
Number of flanges, outer ring	2
Number of flanges, inner ring	0
Loose flange	None
Radial internal clearance	CN
Tolerance class	Normal
Coating	Without
Sealing	Without
Lubricant	None
Relubrication feature	Without

Logistics

Product net weight	0.41 kg
eClass code	23-05-09-01

UNSPSC code	31171505

Technical specification

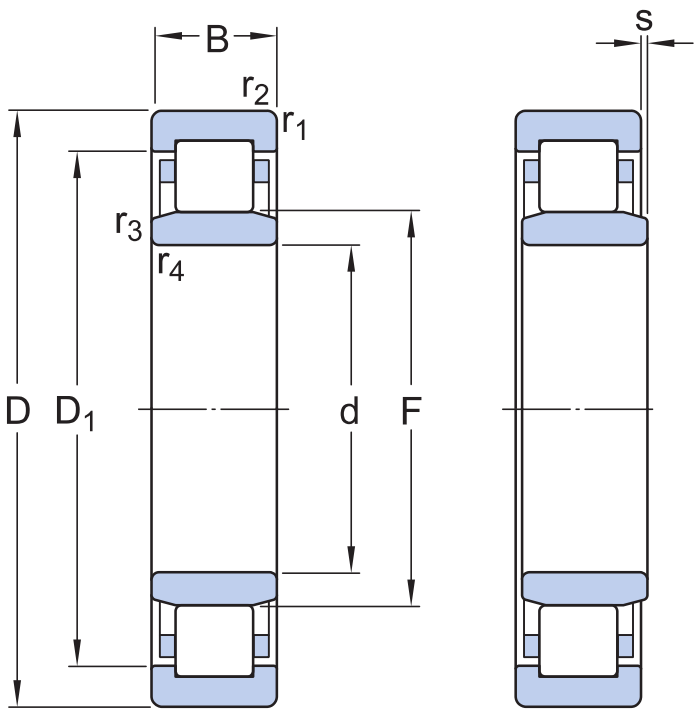

Dimensions

d	30 mm	Bore diameter
D	72 mm	Outside diameter
B	19 mm	Width
D_1	≈ 58.35 mm	Shoulder diameter of outer ring
F	40.5 mm	Raceway diameter of inner ring
$r_{1,2}$	min. 1.1 mm	Chamfer dimension
$r_{3,4}$	min. 1.1 mm	Chamfer dimension
s	max. 1.4 mm	Permissible axial displacement

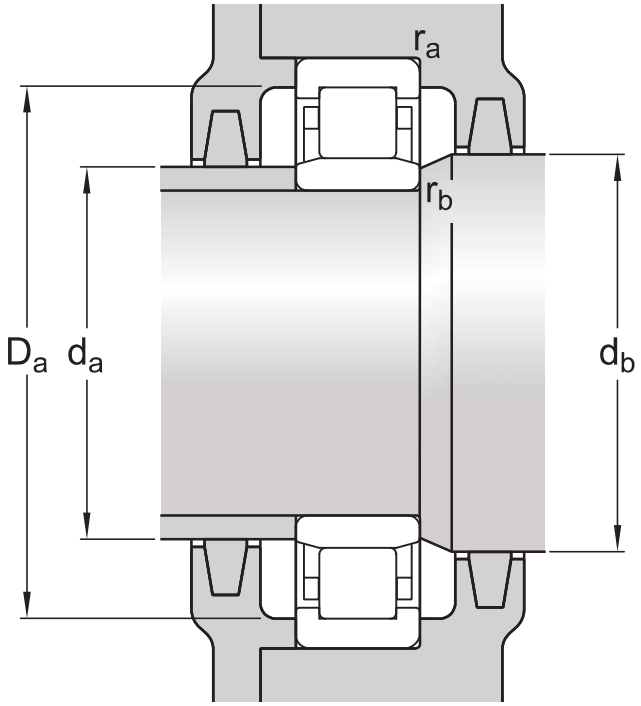

Abutment dimensions

d_a	min. 37 mm	Diameter of spacer sleeve
d_a	max. 39 mm	Diameter of spacer sleeve
d_b	min. 43 mm	Diameter of shaft abutment
D_a	max. 65.1 mm	Diameter of housing abutment
r_a	max. 1 mm	Radius of fillet
r_b	max. 1 mm	Radius of fillet

Calculation data

SKF performance class		SKF Explorer
Basic dynamic load rating	C	58.5 kN
Basic static load rating	C_0	48 kN
Fatigue load limit	P_u	6.2 kN
Reference speed		11 000 r/min
Limiting speed		12 000 r/min
Minimum load factor	k_r	0.15
Limiting value	e	0.2
Calculation factor	Y	0.6

Associated products

Angle ring	HJ 306 EC

Tolerances and clearances

GENERAL BEARING SPECIFICATIONS

- Tolerances: Normal (metric), P6, Normal (inch)
- Radial internal clearance: cylindrical bore, tapered bore
- Axial internal clearance: NUP, NJ + HJ

BEARING INTERFACES

- Seat tolerances for standard conditions
- Tolerances and resultant fit

Compatible products

Recommended product

Angle ring (L-shaped thrust collar) for single row cylindrical roller bearings, NU or NJ design	HJ 306 EC

More Information

Product details

- Designs and variants
- General bearing specifications
- Loads
- Temperature limits
- Permissible speed
- Design considerations
- Designation system

Engineering information

- Principles of rolling bearing selection
- General bearing knowledge
- Bearing selection process
- Bearing failure and how to prevent it

Tools

- SimPro Quick
- SKF Product select
- Bearing Frequency Calculator
- LubeSelect for SKF greases
- Heater selection tool
- Oil Injection Method Program

Terms of use

By accessing and using this website / app owned and published by AB SKF (publ.) (556007-3495 · Gothenburg) (“SKF”), you agree to the following terms and conditions:

Warranty Disclaimer and Limitation of Liability
Although every care has been taken to assure the accuracy of the information on this website / app, SKF provides this information "AS IS" and DISCLAIMS ALL WARRANTIES, EXPRESS OR IMPLIED, INCLUDING, BUT NOT LIMITED TO, IMPLIED WARRANTIES OF MERCHANTABILITY AND FITNESS FOR A PARTICULAR PURPOSE. You acknowledge that your use of this website / app is at your sole risk, that you assume full responsibility for all costs associated with use of this website / app, and that SKF shall not be liable for any direct, incidental, consequential, or indirect damages of any kind arising out of your access to, or use of the information or software made available on this website / app.

Any warranties and representations in this website / app for SKF products or services that you purchase or use will be subject to the agreed upon terms and conditions in the contract for such product or service.

Further, for non-SKF websites / apps that are referenced in our website / app or where a hyperlink appears, SKF makes no warranties concerning the accuracy or reliability of the information in these websites / apps and assumes no responsibility for material created or published by third parties contained therein. In addition, SKF does not warrant that this website / app or these other linked websites / apps are free from viruses or other harmful elements.

Third Party Services
When viewing YouTube content via the SKF website(s) (i.e. using YouTube API Services), you agree to be bound by the YouTube Terms of Service.

Copyright
Copyright in this website / app copyright of the information and software made available on this website / app rest with SKF or its licensors. All rights are reserved. All licensed material will reference the licensor that has granted SKF the right to use the material. The information and software made available on this website / app may not be reproduced, duplicated, copied, transferred, distributed, stored, modified, downloaded or otherwise exploited for any commercial use without the prior written approval of SKF. However, it may be reproduced, stored and downloaded for use by individuals without prior written approval of SKF. Under no circumstances may this information or software be supplied to third parties.

This website /app includes certain images used under license from Shutterstock, Inc.

Trademarks and Patents
All trademarks, brand names, and corporate logos displayed on the website / app are the property of SKF or its licensors, and may not be used in any way without prior written approval by SKF. All licensed trademarks published on this website / app reference the licensor that has granted SKF the right to use the trademark. Access to this website / app does not grant to the user any license under any patents owned by or licensed to SKF.

Changes
SKF reserves the right to make changes or additions to this website / app at any time.