M_A = 4 - 6 Nm

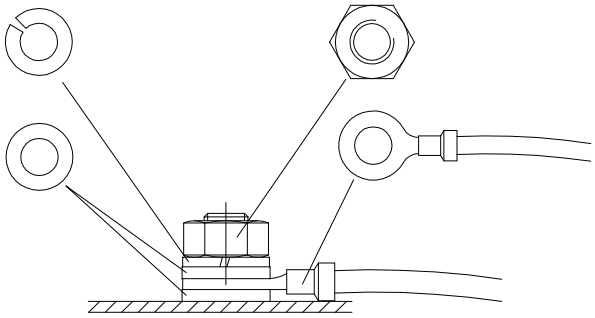



SM

2384.010 2384.020
2384.030 2384.040
2384.510 2384.520
2384.530 2384.540

Raum für Verpackungsdatum
Area for date of packing
(MMJJTT / MMYYDD)

4x	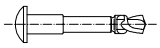	5x33
4x		
2x	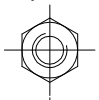	M6
4x		Ø6,4
2x		A6,4
2x		
2x		

Zchng.-Nr. / No. of dwg. : A3602001SM Versandbeutel-Nr. / No. of accessory bag : 298434	Lieferanten-Nr. / No. of supplier :

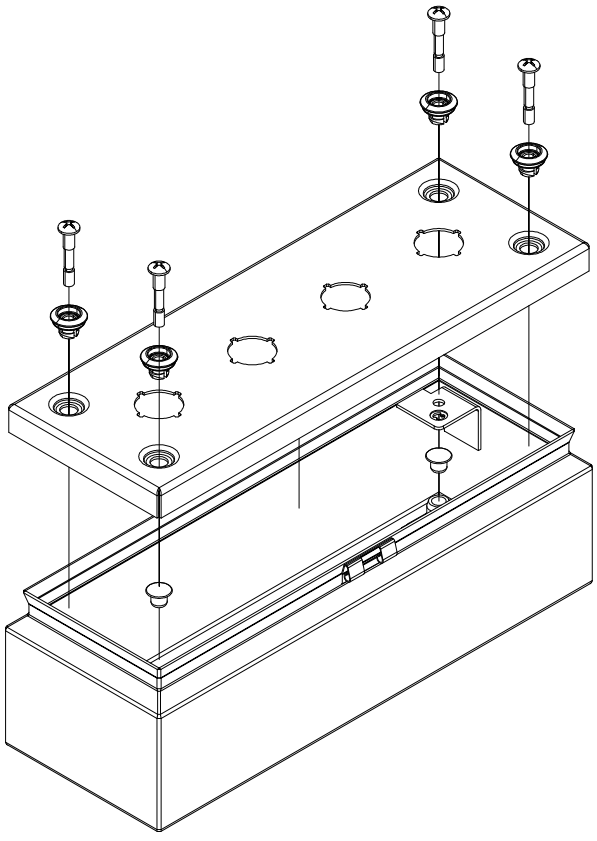

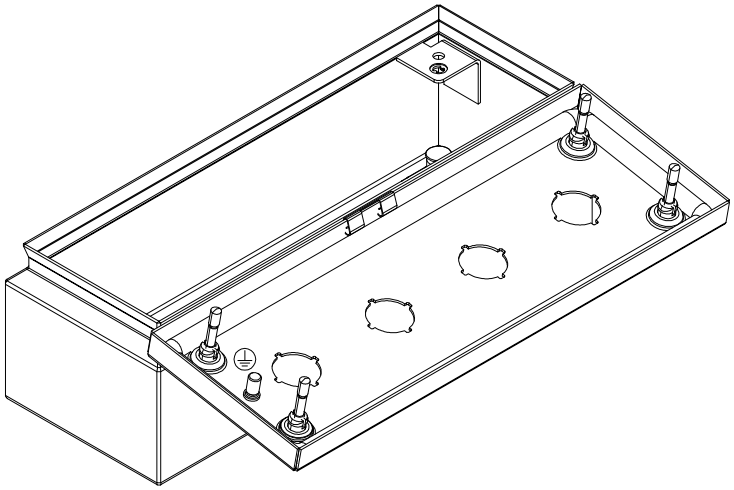

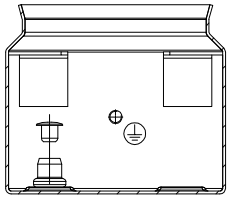

M8