E12353

Wirable plug

SSTAH040MSSFKSG

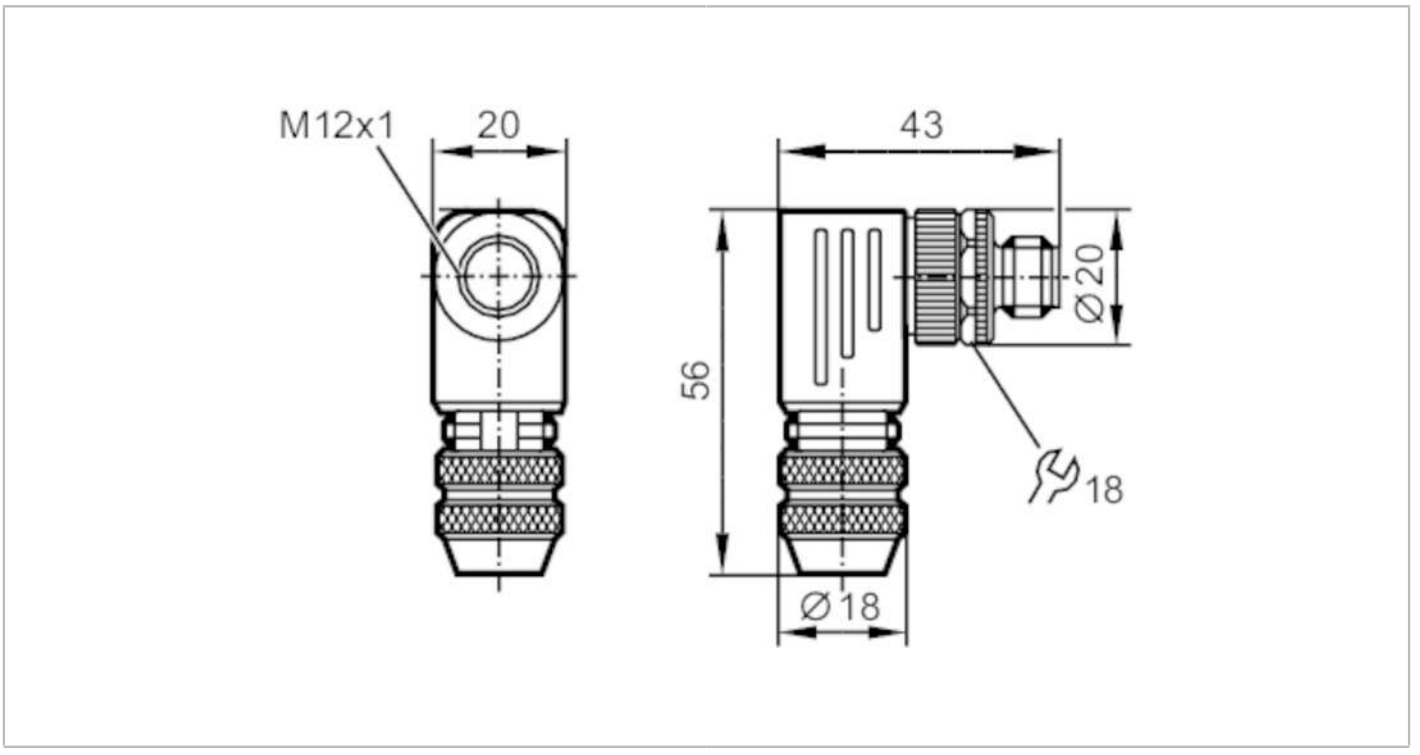

Application		
Special feature		Free from silicone; Gold-plated contacts
Free from silicone		yes
Electrical data		
Operating voltage	[V]	< 250 AC/DC
Max. current load total	[A]	4; (...40 °C)
Operating conditions		
Ambient temperature	[°C]	-40...85
Protection		IP 67
Mechanical data		
Weight	[g]	66.7
Dimensions	[mm]	42 x 20 x 54
Materials		diecast zinc nickel-plated
Moulded-body material		diecast zinc, nickel-plated
Material nut		diecast zinc, nickel-plated
Remarks		
Pack quantity		1 pcs.

E12353

Wirable plug

SSTAH040MSSFKSG

Electrical connection

screw terminals: ...0.75 mm²; Cable sheath: Ø 6...8 mm

Electrical connection - plug

Connector: 1 x M12, angled; coding: A; Moulded body: diecast zinc, nickel-plated; Locking: diecast zinc, nickel-plated; Contacts: gold-plated; Shielded connection cable: shieldable



Connection

