Brand of NTN corporation

# Technical data

## UCEHE207

Bearing units



Grey cast housing, radial insert ball bearing with socket set screws,seal with slinger

## KIT CONTENT

**UC207G2, EHE207**

## VISUAL (S)

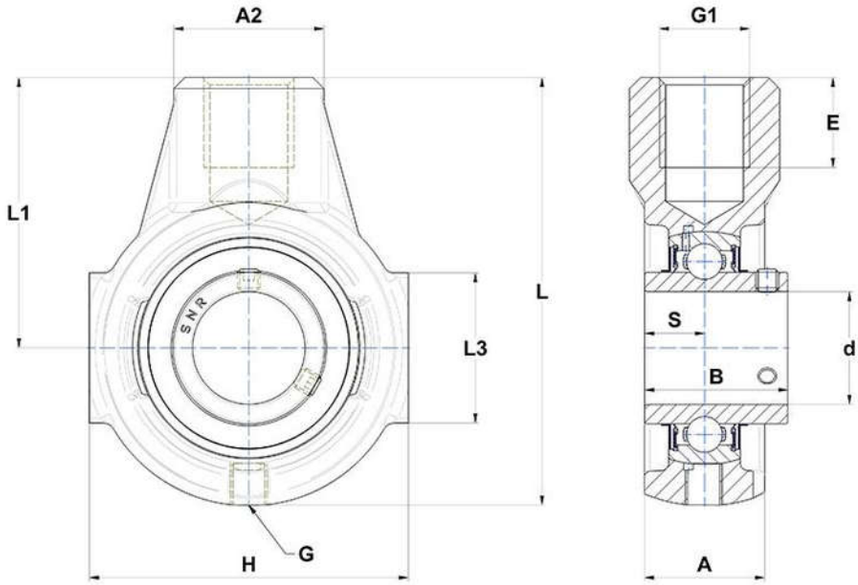


## PRODUCT DEFINITION

| | |
|---|---|
| **Brand** | SNR |
| **A - Housing width** | 32 mm |
| **A2** | 40 mm |
| **B - Width of Inner Ring** | 42,9 mm |
| **d - Shaft diameter** | 35 mm |
| **E - Mounting hole thread depth** | 24 mm |


**NTN Europe**
1 rue des Usines · BP 2017 · 74010 Annecy Cedex · France · Tel. +33 (0)4 50 65 30 00
S.A. au capital de 322 639 919 € · RCS ANNECY B 325 821 072 · Id. Fiscale : FR 48 325 821 072
SIRET 325 821 072 00015 · Code APE 2815 Z · Code NACE 28.15

| PRODUCT DEFINITION | |
|---|---|
| **G - Grease fitting** | R1/8" |
| **G1 - Thread size** | M24 |
| **H - Housing length, width or diameter** | 90 mm |
| **L - Housing length** | 122 mm |
| **L1 - Distance attachment end face to bearing centerline** | 76 mm |
| **L3 - Length of guidance slot/face** | 40 mm |
| **S - Distance front side/bearing centre** | 17,5 mm |

| PRODUCT PERFORMANCE | |
|---|---|
| **C - Dynamic load rating** | 25700000 mN |
| **C0 - Static load rating** | 15200000 mN |
| **Operating temperature min.** | 253,15 °K |
| **Operating temperature max.** | 373,15 °K |

| OTHER FEATURES | |
|---|---|
| **Mass** | 1,17 kg |
| **Recommended tightening torque for set screw** | 11.5 N-m |