datasheet for KLEPS 2800
article number: 972308101



SKS Kontakttechnik GmbH

product description:	order number: 972 308-101
description:	Safety clamp-type test probe with insulated wide opening grip claws for contacting large measuring areas and leads with large cross-sections. 4 mm brass socket connection. Connects with safety measuring leads.
typ:	KLEPS 2800 rot/red
system:	4 mm safety system
order number:	972 308-101
clamping range:	10 mm
clamping typ:	grip claws
color	●
other color versions:	●●
technical data	
measurement category	CAT III
norm	DIN EN 61010-031
type of termination:	4 mm socket
rated voltage:	AC/DC 1000 V
rated current:	20 A
contact resistance:	100 mOhm
material	
contact material:	stainless steel
contact surface material:	nickel-plated
housing material:	PBT
environmental conditions:	
temperature range:	-25 ºC to +80 ºC
inflammable class:	
housing:	94 HB
drawing	

Copyright ©2011 SKS-Kontakttechnik GmbH - printed: Tue Mar 8 2011 8:47:18

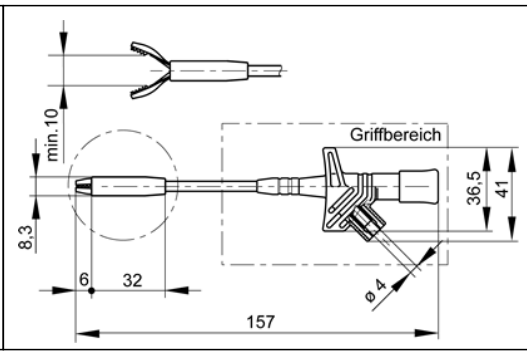

Copyright ©2011 SKS-Kontakttechnik GmbH - printed: Tue Mar 8 2011 8:47:18