1.9.2 Injection Valve for Low-Pressure Metering Pumps

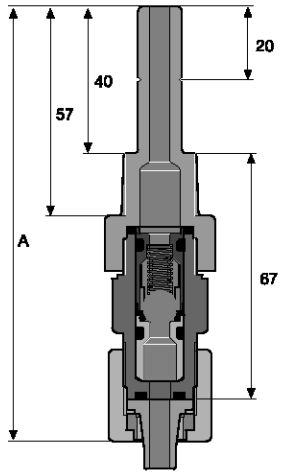

pk_1_105

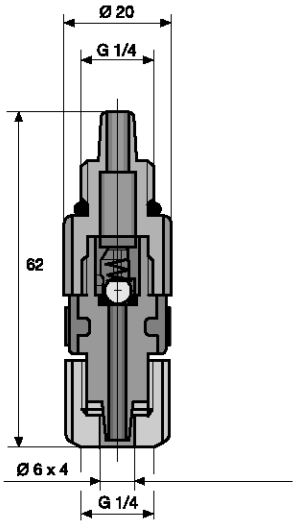

pk_1_042

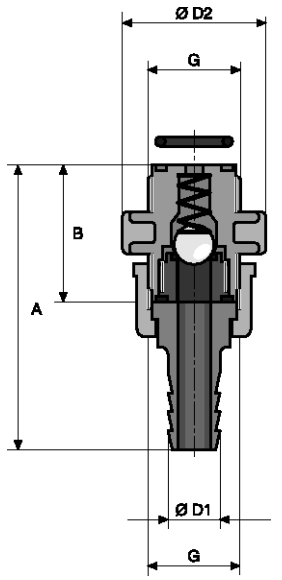

pk_2_029

Injection valves are mounted at the point of injection to connect the metering line. They protect against backflow and generate a defined back pressure.

In the PP, PVC, PVDF and stainless steel versions, the injection valve with ball check is spring-loaded with a Hastelloy C spring, priming pressure approx. 0.5 bar (with R1/4 connector, spring made of stainless steel no. 1.4571, priming pressure approx. 1 bar). They may be fitted in any position.

The TT version without a spring is suitable for vertical installation from below. Valve springs can be retrofitted.

Important: Injection valves are not absolutely leak-tight shut-off devices!

PPE Injection Valve

PP housing, EPDM seals with non-return ball, spring-loaded with Hastelloy C spring, prepressure approx. 0.5 bar with extended screwed socket.

Applications when using appropriate metering lines

25 °C - max. operating pressure 16 bar

45 °C - max. operating pressure 9 bar

Connection	oØ x iØ mm	A mm	Fig.	Order no.
6/4 - R 1/2 for PE/PTFE pipe	6 x 4	119	pk_1_105	924681
8/5 - R 1/2 for PE/PTFE pipe	8 x 5	119	pk_1_105	809476
12/9 - R 1/2 for PE/PTFE pipe	12 x 9	119	pk_1_105	809478
10/4 - R 1/2 for PVC hose	10 x 4	119	pk_1_105	1002920
12/6 - R 1/2 for PVC hose	12 x 6	119	pk_1_105	809477
6/4 - G 1/4 for PE/PTFE pipe*	6 x 4	62	pk_1_042	914184
G 3/4 - DN 10 for PVC hose	24 x 16	83	pk_2_029	809461

* Valve spring from stainless steel 1.4571, priming pressure approx. 0.8 bar

PPB Injection Valve

PP housing, FKM seals with spring-loaded non-return ball, prepressure approx. 0.5 bar.

Applications when using appropriate metering lines

25 °C - max. operating pressure 16 bar

45 °C - max. operating pressure 9 bar

Connection	oØ x iØ mm	A mm	Fig.	Order no.
6/4 - R 1/2 for PE/PTFE pipe	6 x 4	119	pk_1_105	924682
8/5 - R 1/2 for PE/PTFE pipe	8 x 5	119	pk_1_105	924687
12/9 - R 1/2 for PE/PTFE pipe	12 x 9	119	pk_1_105	924688
10/4 - R 1/2 for PVC hose	10 x 4	119	pk_1_105	1002921
12/6 - R 1/2 for PVC hose	12 x 6	119	pk_1_105	924689
G 3/4 - DN 10 for PVC hose	24 x 16	83	pk_2_029	790191

1.9 Hydraulic/Mechanical Installation Accessories

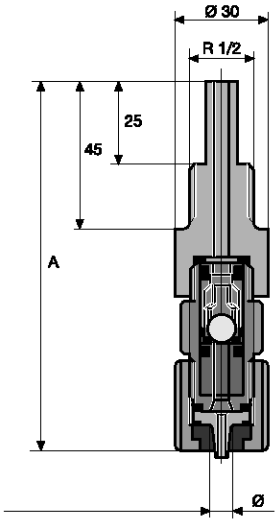

pk_1_046

PP/PTFE Injection Valve

For prevention of chemical deposits. PP body, PTFE mounting insert, EPDM seals with ball check and Hastelloy C spring approx. 0.5 bar priming pressure (Fig. pk_1_046).

Applications when using appropriate metering lines

25 °C - max. operating pressure 16 bar

45 °C - max. operating pressure 9 bar

Connection	oØ x iØ mm	A mm	Fig.	Order no.
6/4 - R 1/2 for PE/PTFE pipe	6 x 4	103	pk_1_046	924588
8/5 - R 1/2 for PE/PTFE pipe	8 x 5	103	pk_1_046	924589
12/9 - R 1/2 for PE/PTFE pipe	12 x 9	106	pk_1_046	924590
10/4 - R 1/2 for PVC hose	10 x 4	106	pk_1_046	1002923
12/6 - R 1/2 for PVC hose	12 x 6	106	pk_1_046	924591

PVC/PTFE Injection Valve

PVC body, PTFE mounting insert, FKM-B seals, spring loaded ball check with Hastelloy C spring, approx. 0.5 bar priming pressure.

Applications when using appropriate metering lines

25 °C - max. operating pressure 16 bar

45 °C - max. operating pressure 7 bar

Connector	oØ x iØ mm	Fig.	Order no.
6/4 - R 1/2 for PE/PTFE pipe	6 x 4	pk_1_046	809450
8/5 - R 1/2 for PE/PTFE pipe	8 x 5	pk_1_046	809451
12/9 - R 1/2 for PE/PTFE pipe	12 x 9	pk_1_046	809452
10/4 - R 1/2 for PVC hose	10 x 4	pk_1_046	1002924
12/6 - R 1/2 for PVC hose	12 x 6	pk_1_046	809453

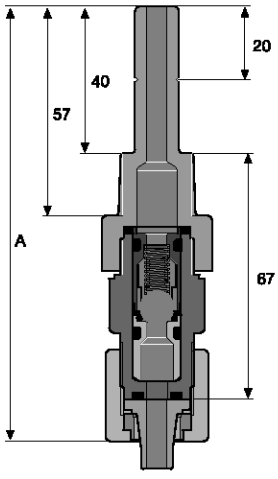

pk_1_105

PCB Injection Valve

Housing made of PVC, seals made of FKM with non-return ball spring-loaded with Hastelloy C spring, priming pressure approx. 0.5 bar, with extended screwed socket. Type 8/4 up to 25 bar.

Applications when using appropriate metering lines

25 °C - max. operating pressure 16 bar

45 °C - max. operating pressure 7 bar

Connection	oØ x iØ mm	A mm	Fig.	Order no.
6/4 - R 1/2 for PE/PTFE pipe	6 x 4	119	pk_1_105	924680
8/4 - R 1/2 for PTFE line	8 x 4	119	pk_1_105	1034621
8/5 - R 1/2 for PE/PTFE pipe	8 x 5	119	pk_1_105	924592
12/9 - R 1/2 for PE/PTFE pipe	12 x 9	119	pk_1_105	924594
10/4 - R 1/2 for PVC hose	10 x 4	119	pk_1_105	1002919
12/6 - R 1/2 for PVC hose	12 x 6	119	pk_1_105	924593
6/4 - G 1/4 for PE/PTFE pipe*	6 x 4	62	–	914559
G 3/4 - DN 10 for PVC hose	24 x 16	83	pk_2_029	809460

* Spring made of 1.4571, approx. 0.8 bar priming pressure.

1.9 Hydraulic/Mechanical Installation Accessories

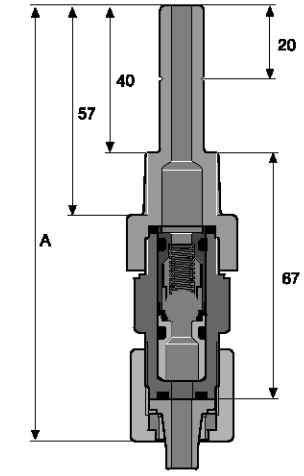

pk_1_105

PVT Injection Valve

Housing PVDF, seals PTFE, with non-return ball, spring-loaded with Hast. C spring, approx. 0.5 bar priming pressure, with extended screwed socket. Type 6/3 up to 20 bar, 8/4 up to 25 bar.

Applications when using appropriate metering lines

25 °C - max. operating pressure 16 bar

45 °C - max. operating pressure 12 bar

Connection	oØ x iØ mm	A mm	Fig.	Order no.
6/3 - R 1/2 for PTFE pipe	6 x 3	119	pk_1_105	1024713
6/4 - R 1/2 for PE/PTFE pipe	6 x 4	119	pk_1_105	1024708
8/4 - R 1/2 for PTFE line	8 x 4	119	pk_1_105	1034619
8/5 - R 1/2 for PE/PTFE pipe	8 x 5	119	pk_1_105	1024710
12/9 - R 1/2 for PE/PTFE pipe	12 x 9	119	pk_1_105	1024711
10/4 - R 1/2 for PVC hose	10 x 4	119	pk_1_105	1024709
12/6 - R 1/2 for PVC hose	12 x 6	119	pk_1_105	1024712
G 3/4 - DN 10 with pressure hose nozzle d16 - DN 10.	24 x 16	84	pk_2_029	1029476

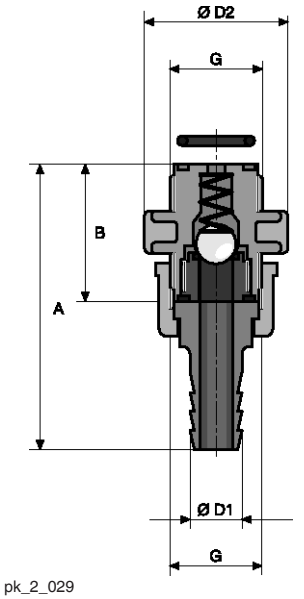

pk_2_029

PVT Injection Valve with Tantalum Spring

PVDF housing, PTFE seals with tantalum spring-loaded ball check, priming pressure approx. 0.5 bar, with extra-long screw-in fitting. 6/3 version up to 20 bar, 8/4 up to 25 bar, for metering of sodium-calcium hypochlorite, with universal tube connector set 6x3, 6x4, 8x4, 8x5, 12x9, 10x4 and 12x6 mm.

Application range when using appropriate metering line

25 °C - max. operating pressure 16 bar

45 °C - max. operating pressure 12 bar

Connection	A mm	Fig.	Order no.
Universal connector, R 1/2	119	pk_1_105	1044653

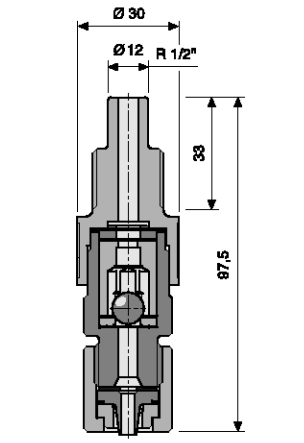

P_AC_0184_SW

TTT Injection Valve

Vertical installation from below. With ball check, without spring. Valve spring (Order No. 469404) can be retrofitted. Body and seals made of PTFE.

Applications when using appropriate metering lines

25 °C - max. operating pressure 10 bar

45 °C - max. operating pressure 5 bar

Connection	oØ x iØ mm	A mm	Fig.	Order no.
6/4 - R 1/2 for PE/PTFE pipe	6 x 4	98	P_AC_0184_SW	809488
8/5 - R 1/2 for PE/PTFE pipe	8 x 5	98	P_AC_0184_SW	809479
12/9 - R 1/2 for PE/PTFE pipe	12 x 9	101	P_AC_0184_SW	809481
12/6 - R 1/2 for PVC hose	12 x 6	101	P_AC_0184_SW	809480
G 3/4 - DN 10 with d16 welding sleeve		–	pk_2_030	809462

