Brand of NTN corporation

Technical data

USFE210

Bearing units



Grey cast housing, radial insert ball bearing with socket set screws, single lip seal

KIT CONTENT

US210G2, FE210

VISUAL (S)

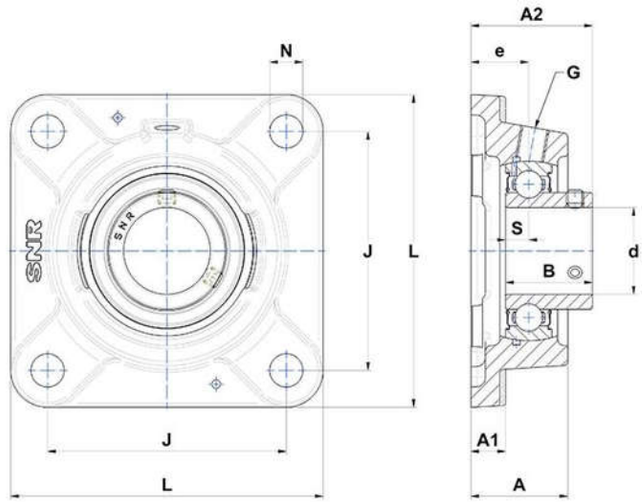

PRODUCT DEFINITION

Brand	SNR
A - Housing height	44 mm
A1 - Housing foot height / flange height	13 mm
A2 - Total height from mounting surface	60,6 mm
B - Width of Inner Ring	43,5 mm
d - Shaft diameter	50 mm

PRODUCT DEFINITION	
e - Distance mounting surface to bearing center	28 mm
G - Grease fitting	R1/8"
J - Mounting holes distance	111 mm
L - Housing width / diameter	143 mm
N - Mounting hole dimension	18 mm
S - Distance front side/bearing centre	10,9 mm

PRODUCT PERFORMANCE	
C - Dynamic load rating	35100000 mN
C0 - Static load rating	23200000 mN
Operating temperature min.	253,15 °K
Operating temperature max.	373,15 °K

OTHER FEATURES	
Mass	2,51 kg
Recommended tightening torque for set screw	11.5 N-m