PN7834

Pressure sensor with display

PN-010-RBR18-QFRKG/US/ /V

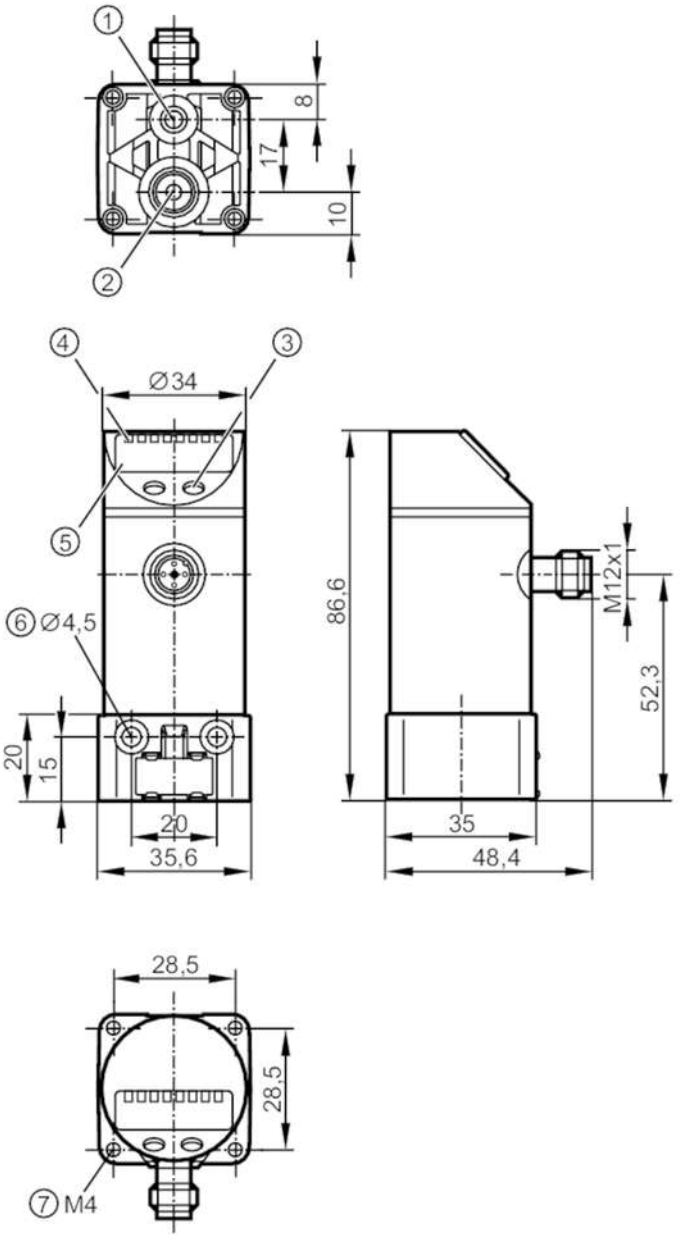

1 ventilation connection M 5 Tightening torque < 2.5 Nm
2 main pressure connection G 1/8 Tightening torque < 8 Nm
3 programming button
4 LEDs Display unit / switching status
5 alphanumeric display 4-digit
6 thread M 4 Tightening torque < 2.5 Nm
7 thread M 4 Tightening torque < 2.5 Nm

Product characteristics			
Number of inputs and outputs	Number of digital outputs: 2		
Measuring range	-1...10 bar	-14.5...145 psi	-0.1...1 MPa
Process connection	threaded connection G 1/8 internal thread		
Application			
Special feature	Gold-plated contacts		

PN7834

Pressure sensor with display

PN-010-RBR18-QFRKG/US/ /V

Application		for industrial applications		
Media		compressed air		
Conditionally suitable for		other media on request		
Medium temperature	[°C]	0...60		
Min. bursting pressure		30 bar	435 psi	3 MPa
Pressure rating		20 bar	290 psi	2 MPa
Type of pressure		relative pressure; vacuum		
Electrical data				
Operating voltage	[V]	18...36 DC; (to SELV/PELV)		
Current consumption	[mA]	< 50		
Min. insulation resistance	[MΩ]	100; (500 V DC)		
Protection class		III		
Reverse polarity protection		yes		
Overvoltage protection		yes; (< 40 V)		
Power-on delay time	[s]	0.3		
Integrated watchdog		yes		
Inputs / outputs				
Number of inputs and outputs		Number of digital outputs: 2		
Outputs				
Total number of outputs		2		
Output signal		switching signal		
Electrical design		PNP/NPN		
Number of digital outputs		2		
Output function		normally open / normally closed; (parameterisable)		
Max. voltage drop switching output DC	[V]	2		
Permanent current rating of switching output DC	[mA]	250		
Switching frequency DC	[Hz]	< 170		
Short-circuit protection		yes		
Type of short-circuit protection		pulsed		
Measuring/setting range				
Measuring range		-1...10 bar	-14.5...145 psi	-0.1...1 MPa
Set point SP		-0.9...10 bar	-13...145 psi	-0.09...1 MPa
Reset point rP		-0.95...9.95 bar	-14...144 psi	-0.095...0.995 MPa
In steps of		0.05 bar	1 psi	0.005 MPa
Factory setting			SP1 = 2.50 bar	rP1 = 2.30 bar
			SP2 = 7.50 bar	rP2 = 7.30 bar
Accuracy / deviations				
Switch point accuracy	[% of the span]	< ± 0,5		
Repeatability	[% of the span]	< ± 0,1; (with temperature fluctuations < 10 K)		
Characteristics deviation	[% of the span]	< ± 0,25 (BFSL) / < ± 0,5 (LS); (BFSL = Best Fit Straight Line; LS = limit value setting)		
Hysteresis deviation		< ± 0,25		

PN7834

Pressure sensor with display

PN-010-RBR18-QFRKG/US/ /V

[% of the span]		
Long-term stability [% of the span]	< ± 0,05; (per 6 months)	
Temperature coefficient zero point [% of the span / 10 K]	0,2; (0...60 °C)	
Temperature coefficient span [% of the span / 10 K]	0,2; (0...60 °C)	
Response times		
Delay time programmable dS, dr [s]	0; 0,2...50	
Software / programming		
Parameter setting options	hysteresis / window; normally open / normally closed; diagnostic function; switching logic; switch-on/switch-off delay; Damping; Display unit	
Operating conditions		
Ambient temperature [°C]	-25...85	
Storage temperature [°C]	-25...85	
Protection	IP 67	
Tests / approvals		
EMC	EN 61000-4-2 ESD	4 kV CD / 8 kV AD
	EN 61000-4-3 HF radiated	10 V/m
	EN 61000-4-4 Burst	2 kV
	EN 61000-4-5 Surge	0,5/1 kV
	EN 61000-4-6 HF conducted	10 V
Shock resistance	DIN IEC 68-2-27	50 g (11 ms)
Vibration resistance	DIN IEC 68-2-6	20 g (10...2000 Hz)
MTTF [years]	284	
Pressure Equipment Directive	Sound engineering practice; can be used for group 2 fluids; group 1 fluids on request	
Mechanical data		
Weight [g]	173.5	
Housing	cylindrical	
Dimensions [mm]	Ø 34 / L = 86.6	
Materials	stainless steel (304/1.4301); PPS; PC; PBT; PEI; FKM	
Materials (wetted parts)	stainless steel (304CU/1.4567); brass; FKM; PPS; silicon (coated)	
Min. pressure cycles	50 million	
Process connection	threaded connection G 1/8 internal thread	
Displays / operating elements		
Display	Display unit	3 x LED, green
	switching status	2 x LED, yellow
	function display	alphanumeric display, 4-digit
Accessories		
Accessories (optional)	mounting set for DIN rail: TH 35-7,5 / EN60715, E37340	
	Adapter: R1/8 - R1/8, E37350	
	Thread extension: 1/8", E30075	
	push-in air fitting for tube: Ø 6 mm, E30076	
	push-in air fitting for tube: Ø 8 mm, E30077	

PN7834

Pressure sensor with display

PN-010-RBR18-QFRKG/US/ /V

Remarks

Pack quantity	1 pcs.

Electrical connection

Connector: 1 x M12; coding: A; Contacts: gold-plated



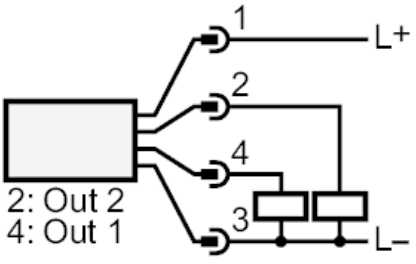

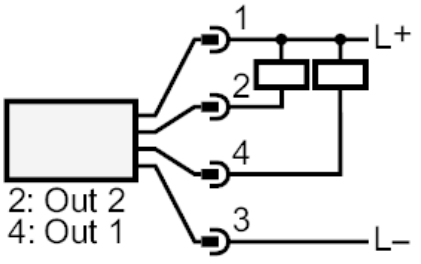

OUT1	switching output
OUT2	switching output
	Diagnostic output