DATASHEET



EX-EBG633.O

- Leergehäuse aus V4A-Material
- Ausführung für 3 Befehlsstellen für Einbau-⌀ 22,3 mm
- inkl. 1 Kabelverschraubung M25 x 1,5

Data

Ordering data

Product type description	EX-EBG633.O
Article number (order number)	101197405
EAN (European Article Number)	4030661500157
eCl@ss number, version 12.0	27-37-12-05
eCl@ss number, version 11.0	27-37-12-05
eCl@ss number, version 9.0	27-37-12-05
ETIM number, version 7.0	EC000200
ETIM number, version 6.0	EC000200

Approvals - Standards

Certificates	TÜV IEC Ex

General data

Gross weight	1,250 g

Ordering code

Product type description:
EX-EBG(1).O

(1)

311	incl. 1 cable gland M20 for cable section 7 ... 12 mm
633	incl. 1 cable gland M25 for cable section 13 ... 18 mm
665	incl. 2 cable glands M25 for cable section 13...18 mm and 1 locking screw

Pictures

Product picture (catalogue individual photo)



ID: knbg6f01
| 45.0 kB | .png | 74.083 x 115.358 mm - 210 x 327 px - 72 dpi
| 354.7 kB | .jpg | 340.078 x 529.167 mm - 964 x 1500 px - 72 dpi
| 27.9 kB | .jpg | 79.375 x 123.472 mm - 225 x 350 px - 72 dpi

Dimensional drawing basic component

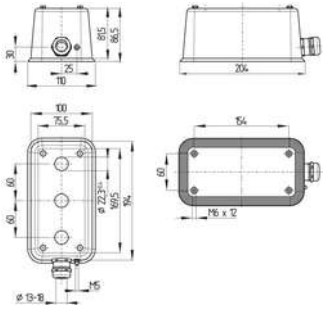

ID: kebg3g02
| 6.1 kB | .png | 74.083 x 69.85 mm - 210 x 198 px - 72 dpi
| 181.3 kB | .jpg | 352.778 x 332.669 mm - 1000 x 943 px - 72 dpi

Dimensional drawing basic component



ID: kebg3g03
| 1.2 MB | .ai | 439.011 x 104.157 mm - 1244 x 295 px - 72 dpi
| 42.1 kB | .jpg | 352.778 x 110.772 mm - 1000 x 314 px - 72 dpi