E35060

Measuring head for infrared temperature sensors

SENSOR HEAD

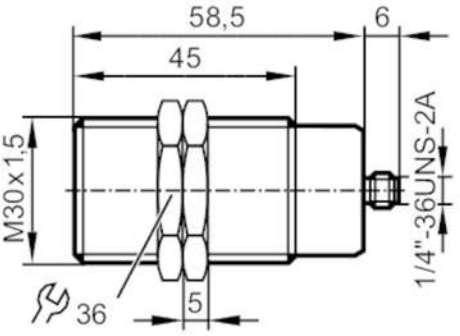

1 3/4" Clamp ISO 2852

Operating conditions		
Ambient temperature	[°C]	-20...250
Mechanical data		
Weight	[g]	169.5
Materials		AlMg3 black anodised; stainless steel (1.4305 / 303); lock nuts: stainless steel (1.4301 / 304); O-ring: FKM
Lens material		tempered optical glass
Tightening torque	[Nm]	0.165
Remarks		
Pack quantity		1 pcs.
Diagrams and graphs		

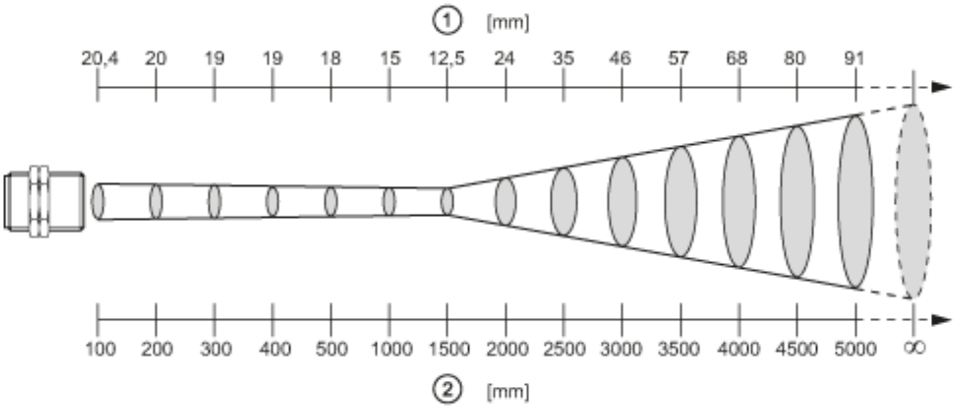

1 diameter of the measured spot

2 measuring distance