20110-103 TELESCOPIC SLIDE UNIVERSAL, 2 U, 2 U 457L



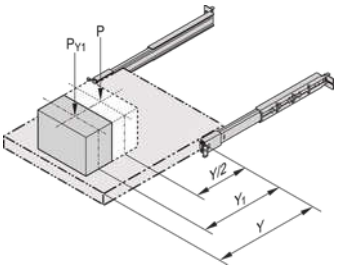

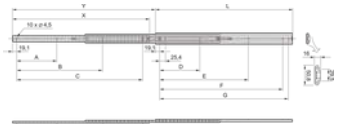

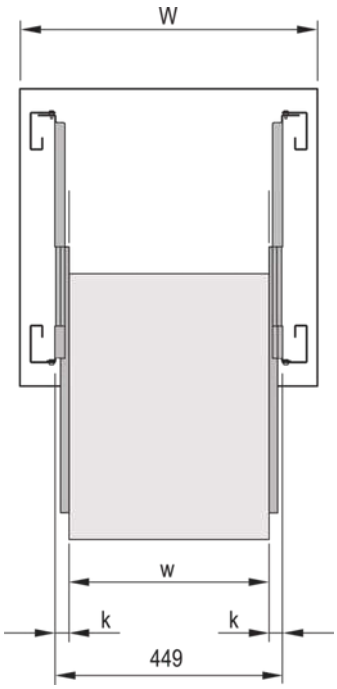

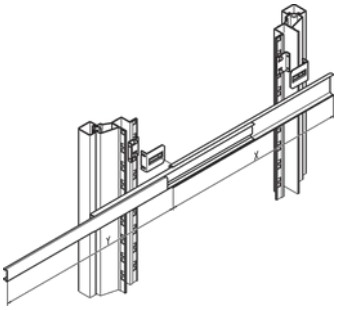

KEY FEATURES

- Rail width k-=-16-mm, max. installation width of extension/drawer w = 417-mm
- Lateral mounting on the 19" uprights (19" plane remains free for fixing of the extension/drawer)
- Locking at full extension
- Extension length->-100-%
- Static load-carrying capacity per pair 46-- 61 kg

PRODUCT ATTRIBUTES

Product Type: Telescopic Slide
Type: Universal
Length: 457 mm
Static Load: 57 kg

ADDITIONAL PRODUCT DETAILS

Universal Telescopic Slide with > 100 % extension and up to 61 kg load capacity.

To mount on 19" plane please order assembly kit separatelyUniversal telescopic Rails can also be fitted without additional components in non-standard applications, thus also in other than 19" cabinets.

CERTIFICATIONS



North America
All locations
+1.763.422.2661
Chat with us:
schroff.nvent.com

Europe
Straubenhardt, Germany
+49.7082.794.0
Betschdorf, France
+33.3.88.90.64.90
Warsaw, Poland
+48.22.209.98.35
Assago, Italy
+39.02.932.7141
Chat with us:
schroff.nvent.com

Asia
Shanghai, China
+86.21.2412.6943
Qingdao, China
+86.532.8771.6101
Singapore
+65.6768.5800
Shin-Yokohama, Japan
+81.45.476.0271
Chat with us:
schroff.nvent.com

Middle East & India
Dubai, United Arab Emirates
+971.4.378.1700
Bangalore, India
+91.80.6715.2001
Istanbul, Turkey
+90.216.250.7374
Chat with us:
schroff.nvent.com

nVent

Our powerful portfolio of brands:
nVent.com CADDY ERICO HOFFMAN RAYCHEM SCHROFF TRACER

© 2023 nVent. All nVent marks and logos are owned or licensed by nVent Services GmbH or its affiliates. All other trademarks are the property of their respective owners.

nVent reserves the right to change specifications without notice.