EBF008

Y-splitter

ZDO2H040VAS0000-00STGH050VAS

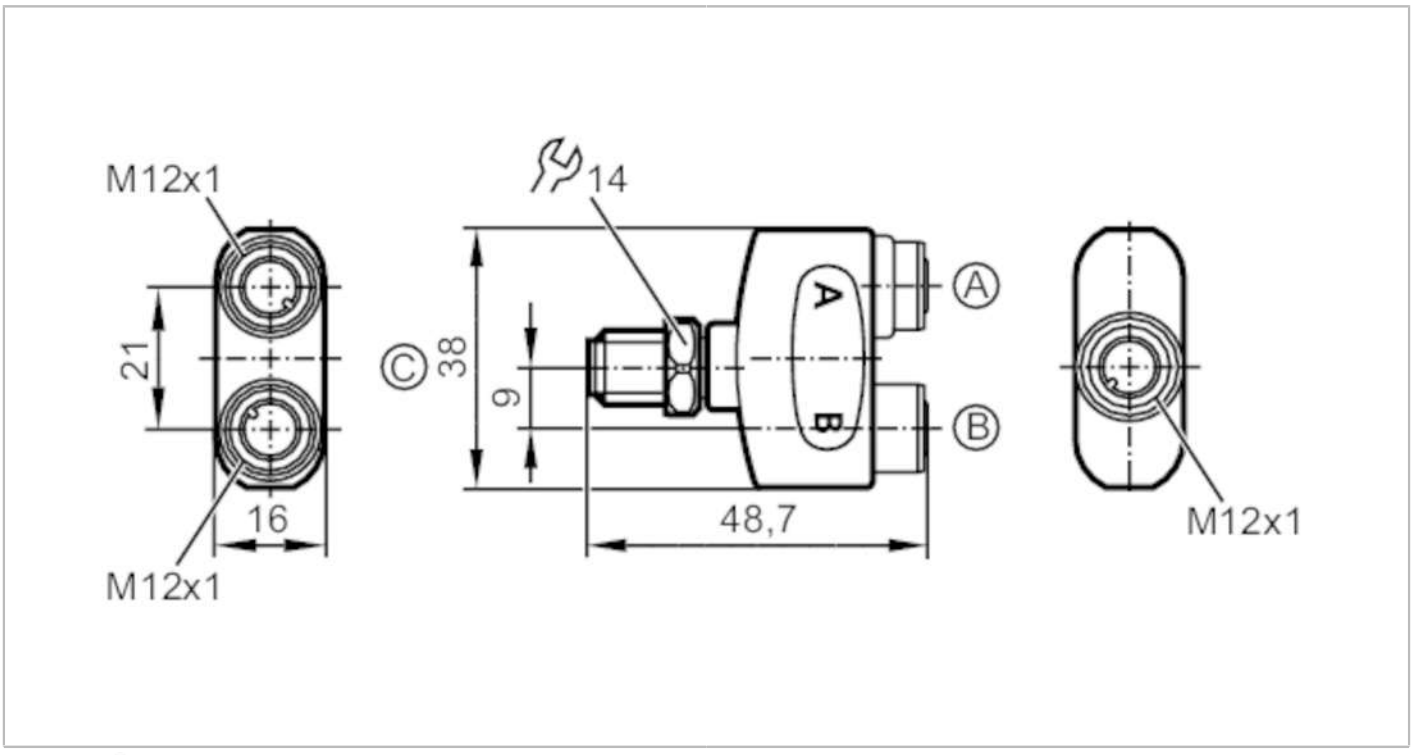

Application			
Special feature		Free from silicone; Gold-plated contacts	
Free from silicone		yes	
Electrical data			
Operating voltage	[V]	< 60 AC/DC; (cULus: 30 AC / 42 DC)	
Protection class		II	
Max. current load per module/slot	[A]	4	
Max. current load total	[A]	4	
Operating conditions			
Ambient temperature	[°C]	-25...100	
Note on ambient temperature		cULus: ...65 °C	
Storage temperature	[°C]	-25...55	
Storage humidity	[%]	10...100	
Other climatic conditions for storage according to stated class		1K22/ DIN 60721-3-1	
Protection		IP 65; IP 67; IP 68; IP 69K	
Tests / approvals			
UL approval		power supply	Class 2
		File number UL	E191684
Mechanical data			
Weight	[g]	34.2	
Materials		housing: PA Halogen-free; Sealing: EPDM	

EBF008

Y-splitter

ZDO2H040VAS0000-00STGH050VAS

Moulded-body material	PA, Halogen-free
Material nut	stainless steel (1.4404 / 316L)

Remarks

Pack quantity	1 pcs.

Electrical connection - plug

Connector: 1 x M12; coding: A; Moulded body: PA, Halogen-free; Locking: stainless steel (1.4404 / 316L); Contacts: gold-plated; Tightening torque: 0.6...1.2 Nm

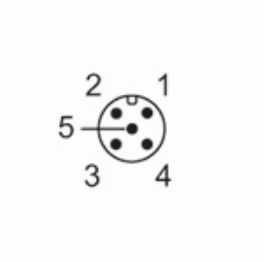

Connection

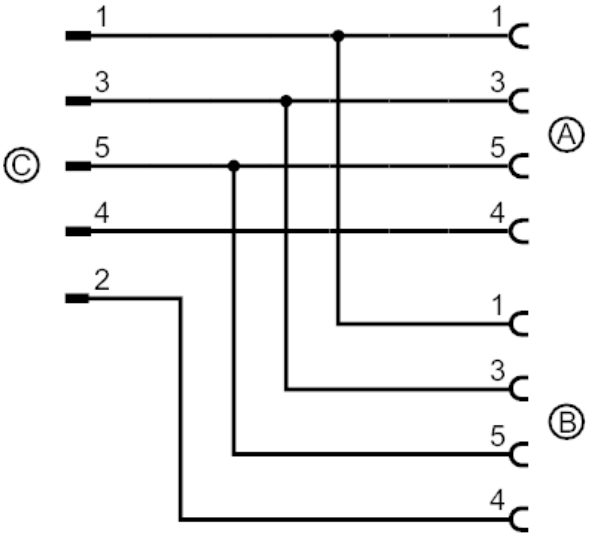

connection to IEC 61076-2-101

Electrical connection - socket

Connector: 2 x M12; coding: A; Moulded body: PA, Halogen-free; Locking: stainless steel (1.4404 / 316L); Contacts: gold-plated; Tightening torque: 0.6...1.5 Nm

