Clevis mounting MP2, Series CM1

3672905000

AVENTICS Clevis mountings



Technical data

Industry	Industrial
Version	for rear eye MP9 with rubber bushing
For series	167 CCL-IC CCL-IS
Piston diameter	50 mm

Material

Material	Aluminum
Surface	forged and anodized
Screws material	Stainless Steel
Material bolt	Stainless Steel
Part No.	3672905000

Clevis mounting MP2, Series CM1

3672905000

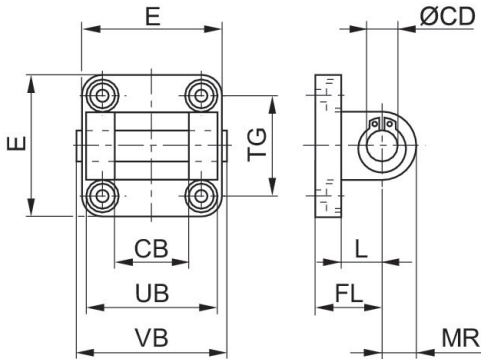

Part No.	Cylinders Ø	CB H14	Ø CD H9	E max.	FL	L min.	MR	UB h14	VB
3682902590	25	18	10	40	20	14	9	36	42,5
3672903000	32	26	10	47,5	22	12	11	45	64
3672904000	40	28	12	53,5	25	15	13	52	71
3672905000	50	32	12	64	27	15	13	60	79
3672906000	63	40	16	74	32	18	17	70	93
3672908000	80	50	16	95	36	20	17	90	113
3672910000	100	60	20	113,5	41	25	21	110	133

Part No.	Cylinders Ø	TG *contains elongated hole
3682902590	25	26/27*
3672903000	32	32
3672904000	40	40*
3672905000	50	46
3672906000	63	59*
3672908000	80	73
3672910000	100	90*