Product data sheet

Specifications



Inductive proximity sensors XS, inductive sensor XS8 40x40x15, PBT, Sn25mm, 12...24 VDC, cable 10 m

XS8C1A1PAL10

Main

Range of product	Telemecanique Inductive proximity sensors XS
Series name	General purpose
Sensor type	Inductive proximity sensor
Device application	-
Sensor name	XS8
Sensor design	Flat form 40 x 40 x 15
Size	15 mm
Body type	Fixed
Detector flush mounting acceptance	Non flush mountable
Material	Plastic
Enclosure material	PBT
Type of output signal	Discrete
Wiring technique	3-wire
[Sn] nominal sensing distance	15 mm flush mountable 25 mm non flush mountable
Discrete output function	1 NO
Output circuit type	DC
Discrete output type	PNP
Electrical connection	Cable
Cable length	10 m
[Us] rated supply voltage	12...24 V DC with reverse polarity protection
Switching capacity in mA	<= 200 mA DC with overload and short-circuit protection
IP degree of protection	IP68 double insulation conforming to IEC 60529

Complementary

Detection face	Frontal
Front material	PBT
Fine adjustment zone	8…15 mm flush mountable 8…25 mm non flush mountable
Differential travel	1...15% of Sr

Disclaimer: This documentation is not intended as a substitute for and is not to be used for determining suitability or reliability of these products for specific user applications

Cable composition	3 x 0.34 mm²
Wire insulation material	PvR
Supply voltage limits	10…36 V DC
Maximum residual current	1.5 mA open state
Switching frequency	<= 1000 Hz
Maximum voltage drop	<2 V (closed)
Current consumption	<= 10 mA no-load
Maximum delay first up	10 ms
Maximum delay response	0.3 ms
Maximum delay recovery	0.8 ms
Marking	CE
Depth	15 mm
Height	40 mm
Width	40 mm
Net weight	0.415 kg

Environment

Product certifications	CSA UL
Ambient air temperature for operation	-25…70 °C
Ambient air temperature for storage	-40…85 °C
Vibration resistance	25 gn amplitude = +/- 2 mm (f = 10…55 Hz) conforming to IEC 60068-2-6
Shock resistance	50 gn for 11 ms conforming to IEC 60068-2-27

Packing Units

Unit Type of Package 1	PCE
Number of Units in Package 1	1
Package 1 Weight	347.0 g
Package 1 Height	6.8 cm
Package 1 width	10.0 cm
Package 1 Length	13.0 cm
Unit Type of Package 2	S02
Number of Units in Package 2	14
Package 2 Weight	5.165 kg
Package 2 Height	15.0 cm
Package 2 width	30.0 cm
Package 2 Length	40.0 cm

Offer Sustainability

Sustainable offer status	Green Premium product
REACh Regulation	REACh Declaration
EU RoHS Directive	Pro-active compliance (Product out of EU RoHS legal scope) EU RoHS Declaration

Mercury free	Yes
RoHS exemption information	Yes
Environmental Disclosure	Product Environmental Profile
California proposition 65	WARNING: This product can expose you to chemicals including: Diisononyl phthalate (DINP), which is known to the State of California to cause cancer, and Di-isodecyl phthalate (DIDP), which is known to the State of California to cause birth defects or other reproductive harm. For more information go to www.P65Warnings.ca.gov

Contractual warranty

Warranty	18 months

Dimensions

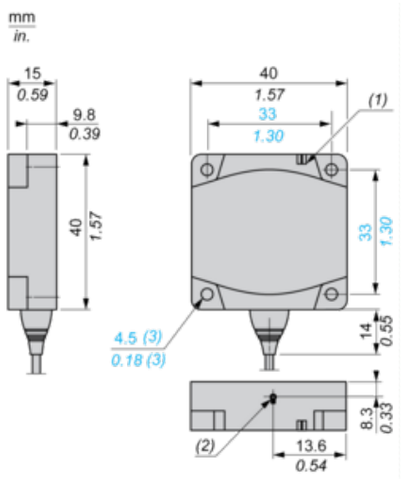

(1) LED

(2) Teach mode button

(3) For CHC type screws

Setting-up

Minimum Mounting Distances (mm)

Side by Side

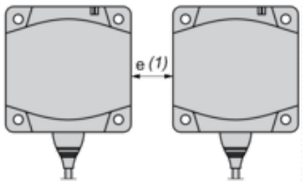

Face to Face

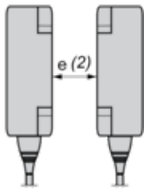

Facing a Metal Object

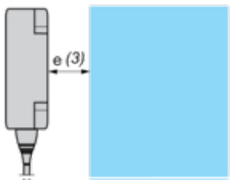

	e (1)	e (2)	e (3)
Flush mounted	60	120	15
Not flush mounted	125	250	

Wiring Schemes

PNP

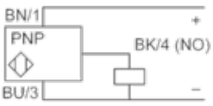

BU : Blue

BN : Brown

BK : Black