WIRING DIAGRAM

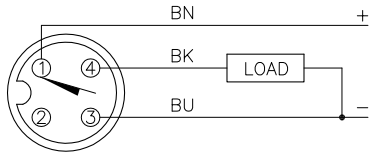

OUTPUT: AP6X

SHORT–CIRCUIT AND OVERLOAD PROTECTED

LOCKNUT LN–M18

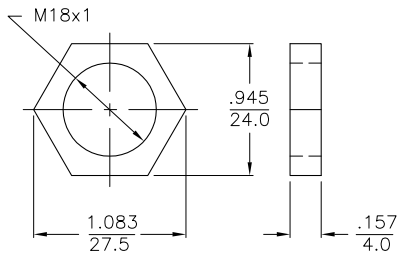

SPECIFICATIONS

RATED OPERATING DISTANCE	8mm [.315]
MOUNTING MODE	FLUSH
MIN. REPEAT ACCURACY	≤ 2%
TEMPERATURE DRIFT	≤ ±10%
HYSTERESIS	3–15%
OPERATING TEMPERATURE	–25°C to +70°C (–13°F to +158°F)
OPERATING VOLTAGE	10–30 VDC
RESIDUAL RIPPLE	≤ 10%
DC RATED OPERATIONAL CURRENT	≤ 200 mA
NO–LOAD CURRENT	≤ 15 mA
RESIDUAL CURRENT	≤ 0.1 mA
RATED INSULATION VOLTAGE	≤ 0.5 kV
SHORT–CIRCUIT PROTECTED	YES
MAX VOLTAGE DROP	≤ 1.8 V
WIRE–BREAKAGE PROTECTION	YES
REVERSE POLARITY PROTECTION	YES
OUTPUT FUNCTION	3–WIRE, NORMALLY OPEN, PNP
SWITCHING FREQUENCY	≤ 0.5 kHz
HOUSING MATERIAL	BRASS/CHROME–PLATED
ACTIVE FACE MATERIAL	PLASTIC, PA12–GF30
CONNECTOR	M12x1
SHOCK RESISTANCE	30 g, 11 ms
VIBRATION RESISTANCE	55 Hz, 1 mm AMPLITUDE (IN ALL 3 PLANES)
DEGREE OF PROTECTION	IP67
SWITCHING STATUS INDICATION	LED: YELLOW

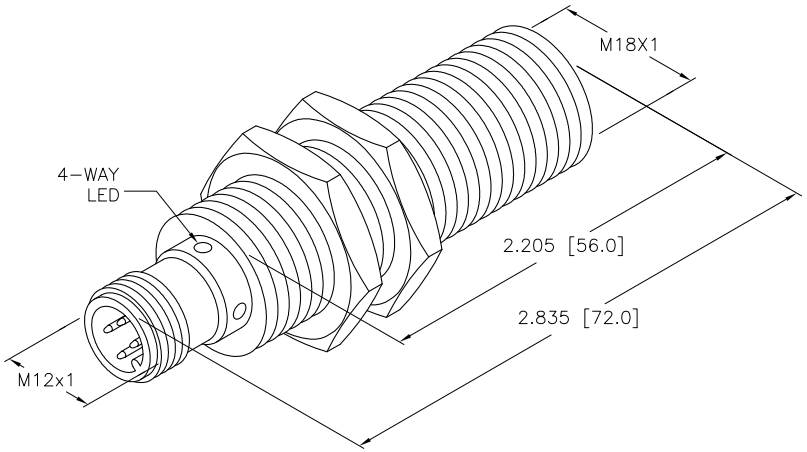

SOURCE DRAWING - FOR REFERENCE ONLY

REV	DESCRIPTION	BY	DATE	ECO NO.
A	DRAWING RELEASE	RDS	02/21/11	

RELATED DOCUMENTS
1.
2.
3.
4.

3RD ANGLE PROJECTION

THIS DRAWING IS PROPERTY OF TURCK INC. USE OF THIS DOCUMENT WITHOUT WRITTEN PERMISSION IS PROHIBITED.

TURCK INC
High Technology Sensors and Automation Controls
3000 CAMPUS DRIVE
MINNEAPOLIS, MN 55441
1–800–544–7769
(763) 553–7300
(763) 553–0708 fax
turck.com

MATERIAL: SEE SPECIFICATIONS

FINISH: SEE SPECIFICATIONS

ALL DIMENSIONS DISPLAYED ON THIS DRAWING ARE FOR REFERENCE ONLY

CONTACT TURCK FOR MORE INFORMATION

DRFT: RDS | DATE: 02/21/11

DSGN: | SCALE: 1=1.0

UNIT OF MEASUREMENT
INCH [MILLIMETER]
DO NOT SCALE THIS DRAWING

DESCRIPTION: BI 8–M18E–AP6X–H1141

IDENTIFICATION NO.: T4615011 | REV: A

FILE: T4615011 | SHEET 1 OF 1