THE INFORMATION CONTAINED IN THIS DRAWING IS THE SOLE PROPERTY OF L-COM, INC. ANY REPRODUCTION IN PART OR WHOLE WITHOUT THE WRITTEN PERMISSION OF L-COM, INC. IS PROHIBITED.

REVISIONS			
REV	DESCRIPTION	DATE	APPROVED
A	INITIAL RELEASE	5/16/22	DGUTTADAURO

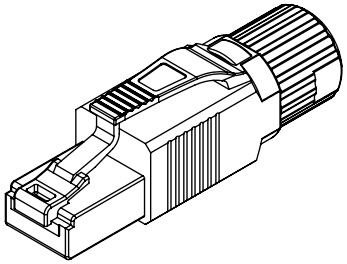

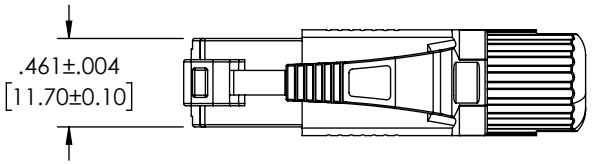

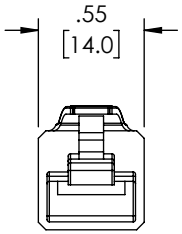

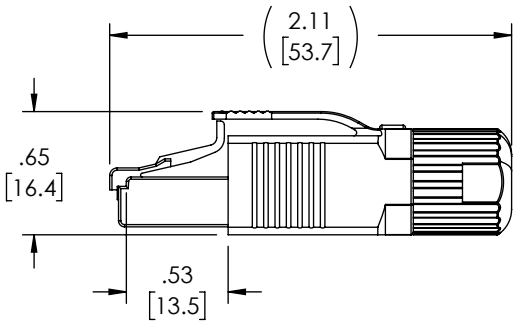

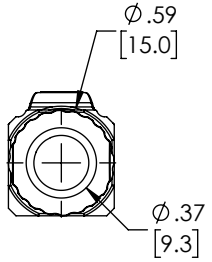

NOTES:

1. SPECIFICATIONS:
   QUALIFIED SCREENED CLASS 6A CONNECTING HARDWARE
   COMPLIANT WITH TIA-568.2-D
   IEC 60603-7-51
   ISO/IEC 11801 2.2 EDITION
   CENELEC EN 50173-1
2. ELECTRICAL:
   INSULATION RESISTANCE: 500 MOhm MINIMUM
   CONTACT RESISTANCE: 20 mOhm MAXIMUM
   POWER OVER ETHERNET: IEC 60512-99-001
3. MECHANICAL:
   DURABILITY: 1000 MATING CYCLES
   CABLE TO PLUG TENSILE STRENGTH: 20 lbs. (89N) MIN.
   TEMPERATURE: -40°C TO 70°C
4. MATERIALS:
   HOUSING: NYLON
   PLUG-BODY: POLYCARBONATE (PC), UL 94V-0
   WIRE-HOLDER: PBT +10%GF
   PLUG-CONTACT: T=.013" [0.35mm] PHOSPHOR BRONZE, CONTACT AREA: GOLD OVER NICKEL PLATING
   IDC-CONTACT: T=.015" [0.4mm] PHOSPHOR BRONZE, Sn OVER NICKEL PLATING
   SHIELDED-BASE: T=.019" [0.5mm] BRASS, NICKEL PLATING
   SHIELDED-COVER: T=.012" [0.3mm] PHOSPHOR BRONZE, NICKEL PLATING
   ACCEPTS CABLE: APPROXIMATELY 26-22AWG SOLID WIRE. OUTER DIAMETER .236-.335" [6.0-8.5mm] DEPENDING ON INSULATION THICKNESS
5. COMPONENT SHALL BE INDIVIDUALLY PACKAGED IN ACCORDANCE WITH L-COM SPECIFICATION PS-0031.

REGULATORY COMPLIANCE:

EU RoHS DIRECTIVE (MOST RECENT RELEASED VERSION)

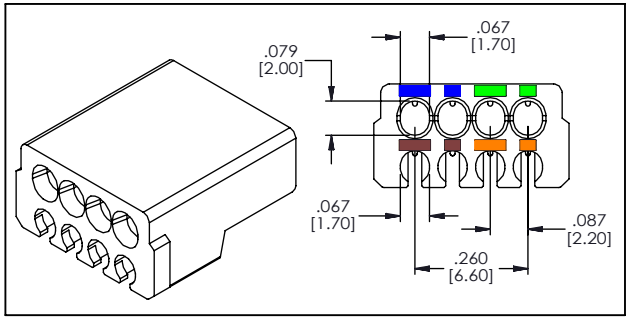

UNLESS OTHERWISE SPECIFIED, DIMENSIONS ARE IN INCHES [mm]

OVERALL CABLE LENGTH TOLERANCE:
≤12 [305] = +1 [25] / -0
>12 [305] ≤60 [1524] = +2 [51] / -0
>60 [1524] ≤120 [3048] = +4 [102] / -0
>120 [3048] ≤300 [7620] = +6 [152] / -0
>300 [7620] = +5% / -0

ALL OTHER DIMENSIONAL TOLERANCES:
.X = ± .2 [5]
.XX = ± .02 [.5]
.XXX = ± .005 [.13]
FRACTIONS ± 1/32
ANGLES ± 1°

THIRD-ANGLE PROJECTION

APPROVALS	DATE
DRAWN BY HBAKKE	5/16/22
CHECKED BY DFRISIELLO	5/17/22
APPROVED BY DGUTTADAURO	5/17/22

CONFIGURATION DETAILS OF UNDIMENSIONED FEATURES MAY VARY

COLOR VARIATIONS MAY OCCUR

L-COM an INFINITE brand
50 High Street, West Mill,
North Andover, MA 01845 USA.
Phone: 1.800.341.5266
1.978.682.6936

CATEGORY: TELECOM/MODULAR

PRODUCT DESCRIPTION: CATEGORY 6A ETHERNET RJ45 FIELD TERMINATION PLUG MALE, SHIELDED, 22-26AWG, POE

SIZE	CAGE CODE	ITEM NO.	REV.
A	43321	TSPFTC6AS-POE	A

SCALE: NONE | CAD FILE: TSPFTC6AS-POE.SLDDRW | SHEET 1 OF 1

T-Rev.D