PPS1 UNS - Aluminium female sliding union for pipe





Description	
Reference	**For pipe OD (mm)**
PPS1 UNS25	25
PPS1 UNS32	32
PPS1 UNS40	40
PPS1 UNS50	50
PPS1 UNS63	63

Prevost UK LTD - Unit G, Tower Business Park - Commercial Road - BB3 OFJ Darwen - Lancashire - United kingdom
Phone. (+44) 01254 873 389 -sales@prevost-ltd.co.uk - www.prevost.eu

PPS1 UNS80	80
PPS1 UNS100	100

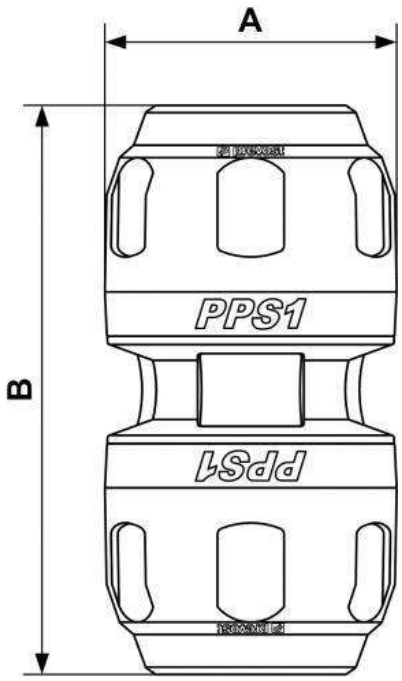

Dimensions		
Reference	**A mm**	**B mm**
PPS1 UNS25	46	90
PPS1 UNS32	57	106
PPS1 UNS40	68	125
PPS1 UNS50	84	152
PPS1 UNS63	100	173

PPS1 UNS80	121	205
PPS1 UNS100	211	295