PPS1 UN - Aluminium female union for pipe





Ø 100

Prevost UK LTD - Unit G, Tower Business Park - Commercial Road - BB3 OFJ Darwen - Lancashire - United kingdom
Phone. (+44) 01254 873 389 -sales@prevost-ltd.co.uk - www.prevost.eu

Description	
Reference	**For pipe OD (mm)**
PPS1 UN16	16
PPS1 UN20	20
PPS1 UN25	25
PPS1 UN32	32
PPS1 UN40	40
PPS1 UN50	50
PPS1 UN63	63
PPS1 UN80	80
PPS1 UN100	100

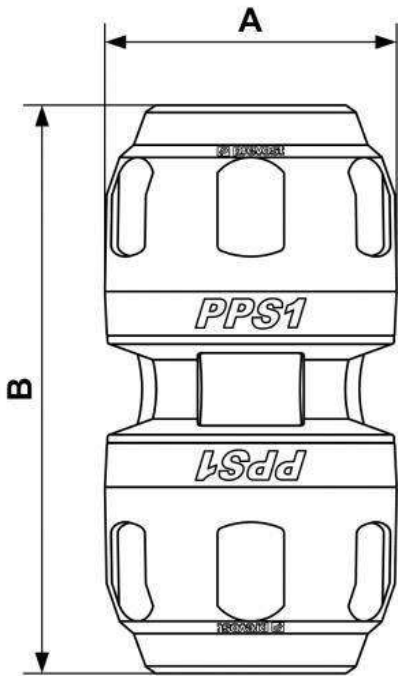

Dimensions		
Reference	**A mm**	**B mm**
PPS1 UN16	32	64
PPS1 UN20	38	78
PPS1 UN25	46	90
PPS1 UN32	57	106
PPS1 UN40	68	125
PPS1 UN50	84	152
PPS1 UN63	100	173

Prevost UK LTD - Unit G, Tower Business Park - Commercial Road - BB3 OFJ Darwen - Lancashire - United kingdom
Phone. (+44) 01254 873 389 -sales@prevost-ltd.co.uk - www.prevost.eu

PPS1 UN80	121	205
PPS1 UN100	153.5	191.5

Prevost UK LTD - Unit G, Tower Business Park - Commercial Road - BB3 OFJ Darwen - Lancashire - United kingdom
Phone. (+44) 01254 873 389 -sales@prevost-ltd.co.uk - www.prevost.eu