efector100

IS5035

IS-3002-BPOG/AS-510

Inductive sensors

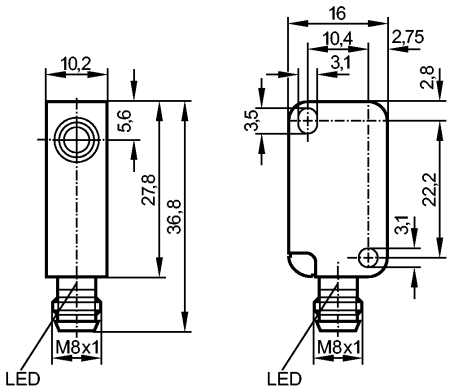

Made in Germany

Product characteristics		
Inductive sensor		
Rectangular, plastics		
Connector		
Sensing range 2 mm; [f] flush mountable		
Electrical data		
Electrical design		DC PNP
Operating voltage	[V]	10...36 DC; "supply class 2" to cULus.
Current consumption	[mA]	15 (24 V)
Protection class		III
Reverse polarity protection		no
Outputs		
Output function		normally open
Voltage drop	[V]	< 1
Current rating	[mA]	200
Short-circuit protection		no
Overload protection		no
Switching frequency	[Hz]	800
Range		
Sensing range	[mm]	2
Real sensing range (Sr)	[mm]	2 ± 10 %
Operating distance	[mm]	0...1.6
Accuracy / deviations		
Correction factors		mild steel = 1 / stainless steel approx. 0.7 / brass approx. 0.4 / Al approx. 0.3 / Cu approx. 0.2
Hysteresis	[% of Sr]	1...15
Switch-point drift	[% of Sr]	-10...10
Environment		
Ambient temperature	[°C]	-25...80
Protection		IP 67
Tests / approvals		
EMC		EN 60947-5-2 EN 55011: class B

MTTF	[Years]	3523
Mechanical data		
Mounting		flush mountable
Housing materials		PBT
Tightening torque	[Nm]	< 0.5 (with washer)
Weight	[kg]	0.012
Displays / operating elements		
Output status indication	LED	yellow
Electrical connection		
Connection		M8 connector

Wiring

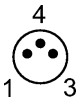

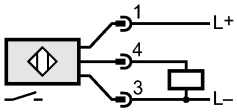

Remarks		
Pack quantity	[piece]	1