E43351

Probe for level sensors

LR PROBE L210

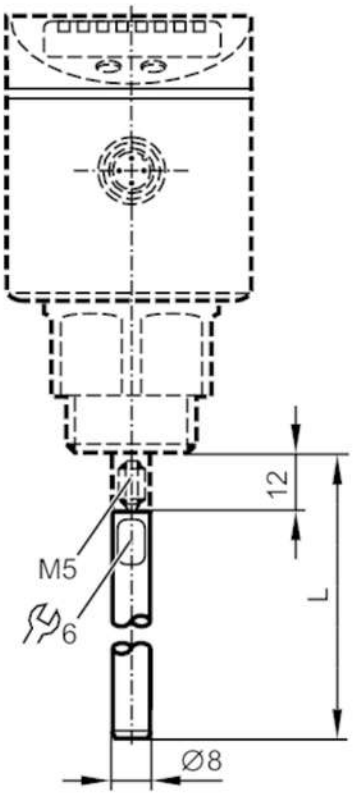

Application		
Design		for level sensors LR
Measuring/setting range		
Probe length L	[mm]	210
Mechanical data		
Weight	[g]	90.2
Materials		stainless steel (1.4404 / 316L)
Tightening torque	[Nm]	4
Remarks		
Pack quantity		1 pcs.