PN7036

Pressure sensor with display

PN-2,5-RER14-QFRKG/US/ /V

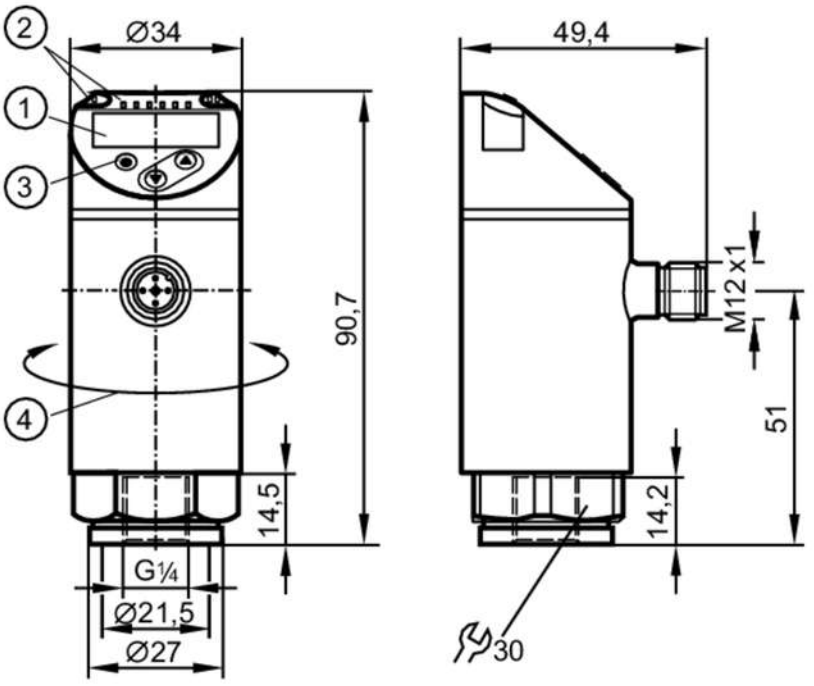

1 alphanumeric display 4-digit red/green
2 LEDs Display unit / switching status
3 programming button
4 upper part of the housing can be rotated 345°

Product characteristics		
Number of inputs and outputs		Number of digital outputs: 2
Measuring range	[kPa]	0...250
Process connection		threaded connection G 1/4 internal thread
Application		
Special feature		Gold-plated contacts
Measuring element		ceramic-capacitive pressure measuring cell
Application		for industrial applications
Media		liquids and gases
Medium temperature	[°C]	-25...80
Min. bursting pressure	[kPa]	5000
Pressure rating	[kPa]	2000
Type of pressure		relative pressure
Electrical data		
Operating voltage	[V]	18...30 DC; (to SELV/PELV)
Current consumption	[mA]	< 35
Min. insulation resistance	[MΩ]	100; (500 V DC)
Protection class		III
Reverse polarity protection		yes
Power-on delay time	[s]	< 0.3

PN7036

Pressure sensor with display

PN-2,5-RER14-QFRKG/US/ /V

Integrated watchdog		yes
Inputs / outputs		
Number of inputs and outputs		Number of digital outputs: 2
Outputs		
Total number of outputs		2
Output signal		switching signal; IO-Link; (configurable)
Electrical design		PNP/NPN
Number of digital outputs		2
Output function		normally open / normally closed; (parameterisable)
Max. voltage drop switching output DC	[V]	2.5
Permanent current rating of switching output DC	[mA]	150; (200 (...60 °C) 250 (...40 °C))
Switching frequency DC	[Hz]	< 170
Short-circuit protection		yes
Type of short-circuit protection		pulsed
Overload protection		yes
Measuring/setting range		
Measuring range	[kPa]	0...250
Factory setting / CMPT = 2		
Set point SP	[kPa]	2...250
Reset point rP	[kPa]	1...249
Min. difference between SP and rP	[kPa]	2
In steps of	[kPa]	1
Status_B High Resolution / CMPT = 3		
Set point SP	[kPa]	2...250
Reset point rP	[kPa]	1...249
Min. difference between SP and rP	[kPa]	2
In steps of	[kPa]	1
Accuracy / deviations		
Switch point accuracy	[% of the span]	< ± 0,5
Repeatability	[% of the span]	< ± 0,1; (with temperature fluctuations < 10 K)
Characteristics deviation	[% of the span]	< ± 0,25 (BFSL) / < ± 0,5 (LS); (BFSL = Best Fit Straight Line; LS = limit value setting)
Hysteresis deviation	[% of the span]	< ± 0,25
Long-term stability	[% of the span]	< ± 0,05; (per 6 months)
Temperature coefficient zero point	[% of the span / 10 K]	< ± 0,2; (-0...80 °C)
Temperature coefficient span		< ± 0,2; (-0...80 °C)

PN7036

Pressure sensor with display

PN-2,5-RER14-QFRKG/US/ /V

[% of the span / 10 K]			
Response times			
Response time	[ms]	< 3	
Delay time programmable dS, dr	[s]	0...50	
Software / programming			
Parameter setting options		hysteresis / window; normally open / normally closed; switching logic; switch-on/switch-off delay; Damping; Display unit	
Interfaces			
Communication interface		IO-Link	
Transmission type		COM2 (38,4 kBaud)	
IO-Link revision		1.1	
SDCI standard		IEC 61131-9	
SIO mode		yes	
Required master port type		A; (when pin 2 not connected: B)	
Supported DeviceIDs		**Type of operation**	**DeviceID**
		Factory setting / CMPT = 2	440
		Status_B High Resolution / CMPT = 3	625
Note		For further information please see the IODD PDF file under "Downloads"	
Factory setting / CMPT = 2			
Profiles		Smart Sensor: Process Data Variable; Device Identification, Device Diagnosis	
Min. process cycle time	[ms]	2.3	
IO-Link resolution pressure	[kPa]	1	
IO-Link process data (cyclical)		**function**	**bit length**
		pressure	14
		binary switching information	2
IO-Link functions (acyclical)		application specific tag	
Status_B High Resolution / CMPT = 3			
Profiles		Smart Sensor ED2: Digital Measuring Sensor (0x000A), Identification and Diagnosis (0x4000)	
Min. process cycle time	[ms]	3	
IO-Link resolution pressure	[kPa]	0.1	
IO-Link process data (cyclical)		**function**	**bit length**
		pressure	16
		device status	4
		binary switching information	2
IO-Link functions (acyclical)		application specific tag	
Operating conditions			
Ambient temperature	[°C]	-25...80	
Storage temperature	[°C]	-40...100	
Protection		IP 65; IP 67	
Tests / approvals			
EMC		DIN EN 61000-6-2	
		DIN EN 61000-6-3	
Shock resistance		DIN EN 60068-2-27	50 g (11 ms)
Vibration resistance		DIN EN 60068-2-6	20 g (10...2000 Hz)

PN7036

Pressure sensor with display

PN-2,5-RER14-QFRKG/US/ /V

MTTF	[years]	260	
UL approval		UL Approval no.	J001
Pressure Equipment Directive		Sound engineering practice; can be used for group 2 fluids; group 1 fluids on request	

Mechanical data

Weight	[g]	226	
Housing		cylindrical	
Dimensions	[mm]	Ø 34 / L = 90.7	
Materials		stainless steel (316L/1.4404); PBT+PC-GF30; PBT-GF20; PC	
Materials (wetted parts)		stainless steel (316L/1.4404); ceramics; FKM	
Min. pressure cycles		100 million	
Tightening torque	[Nm]	25...35; (recommended tightening torque; depends on lubrication, seal and pressure rating)	
Process connection		threaded connection G 1/4 internal thread	
Restrictor element integrated		no (can be retrofitted)	

Displays / operating elements

Display	Display unit	3 x LED, green (kPa)
	switching status	2 x LED, yellow
	measured values	alphanumeric display, red/green 4-digit

Remarks

Pack quantity	1 pcs.

Electrical connection

Connector: 1 x M12; coding: A; Contacts: gold-plated



PN7036

Pressure sensor with display

PN-2,5-RER14-QFRKG/US/ /V

Connection

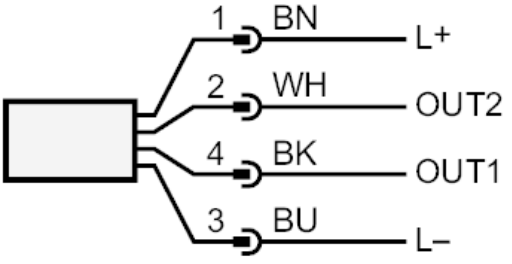

OUT1	switching output IO-Link
OUT2	switching output
	colours to DIN EN 60947-5-2
	Core colours :
BK =	black
BN =	brown
BU =	blue
WH =	white