eSIGN / Accessories

Bracket for 1-sided mount. BK Type 4X



Part No.:	960.000.65

MECHANICAL DATA	
Height	98 mm
Diameter	70 mm
Materials	PA-GF
Housing colour	Black
Weight with packaging	65 g
Product weight	56 g

APPROVAL DATA	
Conforms with CE	No
WEEE	No
Conforms with RED directive	No
Conform with ATEX-directive	No
Conforms with CCC-Ex	No
Conforms with CCC	No
Conforms with UL	No
Conforms with FCC	No
Conforms with IC	No
EAC certificate available	No
Conforms with UKCA (Importer)	No
Conforms with CMIM	No
Conforms with AS-I	No
Conforms with DNV	No
Conforms with RoHS CN	No
Conforms with VdS	No

! For additional installation and mounting information, refer to the appropriate user guide at www.werma.com. This printed copy is for information only and is subject to alteration.

eSIGN / Accessories

Bracket for 1-sided mount. BK Type 4X

DRAWING

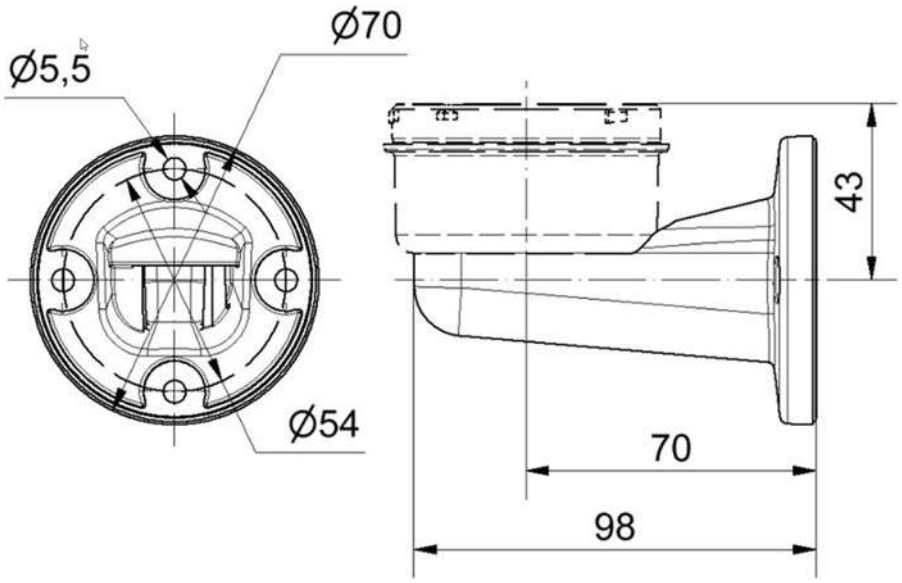

! For additional installation and mounting information, refer to the appropriate user guide at www.werma.com. This printed copy is for information only and is subject to alteration.