OMRON

PCB Relay

G4A

Miniature Single-pole Relay with 80-A Surge Current and 20-A Switching Current

- Ideal for motor switching.
- Miniature, relay with high switching capacity built-in applications.
- Creepage distance conforms to UL and CSA standards.
- Highly noise-resistive insulation materials employed.
- Standard model available with flux protection construction.



Ordering Information

Contact form	Terminals	Coil terminals	Rated voltage	Model
SPST-NO	#250 tab terminals	PCB terminals	5, 12, 24 VDC	G4A-1A
	PCB terminals			G4A-1A-P

Note: When ordering, add the rated coil voltage to the model number.

Example: G4A-1A 12 VDC
Rated coil voltage

Model Number Legend:

G4A - □ □ - □ □ VDC
1 2 3 4

1. **Number of Poles**
   1: 1 pole
2. **Contact Form**
   A: SPST-NO
3. **Terminals**
   None: Relays with #250 tab/PCB
   P: Straight PCB
4. **Rated Coil Voltage**
   5, 12, 24 VDC

Specifications

■ Coil Ratings

Rated voltage		5 VDC	12 VDC	24 VDC
Rated current		180 mA	75 mA	37.5 mA
Coil resistance		27.8 Ω	160 Ω	640 Ω
Coil inductance	**Armature OFF**	---	0.8 H	3.5 H
(ref. value)	**Armature ON**	---	1.1 H	4.8 H
Must operate voltage		70% of rated voltage max.		
Must release voltage		10% of rated voltage min.		
Max. voltage		110% of rated voltage		
Power consumption		Approx. 0.9 W		

Note: 1. The rated current and coil resistance are measured at a coil temperature of 23°C with a tolerance of ±10%.
2. Operating characteristics are measured at a coil temperature of 23°C.

■ Contact Ratings

Rated load	20 A at 250 VAC
Rated carry current	20 A
Max. switching voltage	250 VAC
Max. switching current	20 A
Max. switching capacity	5,000 VA
Min. permissible load	100 mA at 5 VDC

Note: P level: $\lambda_{60} = 0.1 \times 10^{-6}$/operation (with an operating frequency of 120 operations/min)

■ Life Expectancies

With Motor Load

Load conditions	Switching frequency	Electrical life expectancy
250 VAC: Inruch current: 80 A, 0.3 s (cosϕ= 0.7) Break current: 20 A (cosϕ = 0.9)	ON: 1.5 s OFF: 1.5 s	100,000 operations

With Overload

Load conditions	Switching frequency	Electrical life expectancy
250 VAC: Inruch current: 80 A (cosϕ= 0.7) Break current: 80 A (cosϕ = 0.7)	ON: 1.5 s OFF: 1.5 s	1,500 operations

With Inverter Load

Load conditions	Switching frequency	Electrical life expectancy
100 VAC; Inrush current: 200 A (0–P) Break current: 20 A	ON: 3 s OFF: 5 s	30,000 operations

■ Characteristics

Contact resistance	30 mΩ max.
Operate time	20 ms max.
Release time	10 ms max.
Max. operating frequency	Mechanical: 18,000 operations/hr
Insulation resistance	1,000 MΩ min. (at 500 VDC)
Dielectric strength	4,500 VAC 50/60 Hz for 1 min between coil and contact
	1,000 VAC 50/60 Hz for 1 min between contacts of same polarity
Vibration resistance	Destruction: 10 to 55 Hz, 1.5-mm double amplitude Malfunction: 10 to 55 Hz, 1.5-mm double amplitude
Shock resistance	Destruction: 1,000 m/s^2 (approx. 100G) Malfunction: 200 m/s^2 (approx. 20G)
Life expectancy	Mechanical: 2,000,000 operations min. (at 18,000 operations/hr) Motor load: 100,000 operations min. (ON/OFF: 1.5 s) Inverter load: 30,000 operations min. (ON: 3 s, OFF: 5 s)
Ambient temperature	Operating: –20°C to 55°C (with no icing)
Ambient humidity	Operating: 35% to 85%
Weight	Approx. 23 g

Note: The data shown above are initial values.

Engineering Data

Max. Switching Capacity

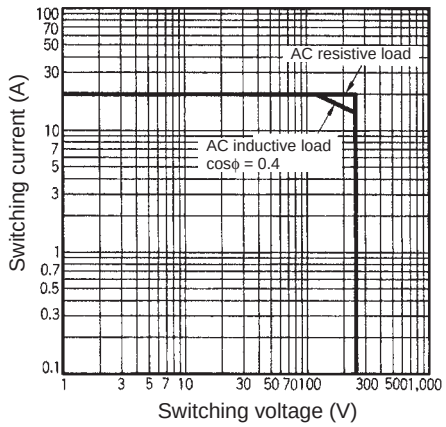

Life Expectancy

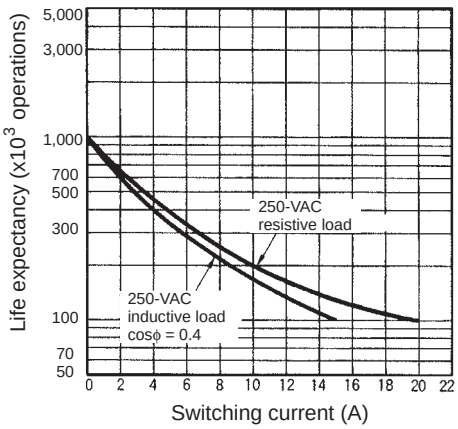

Dimensions

Note: All units are in millimeters unless otherwise indicated; dimensions shown in parentheses are in inches.

G4A-1A

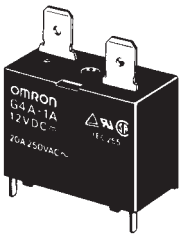

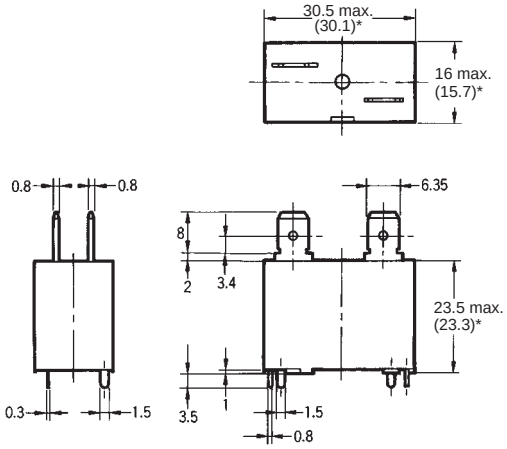

*Average value

Mounting Holes (Bottom View)

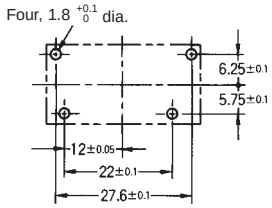

Terminal Arrangement /Internal Connections

(Top View) **(Bottom View)**

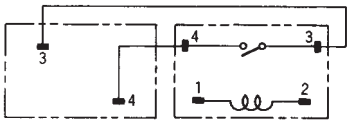

Tab Terminal **PCB Terminal**

G4A-1A-P

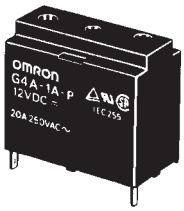

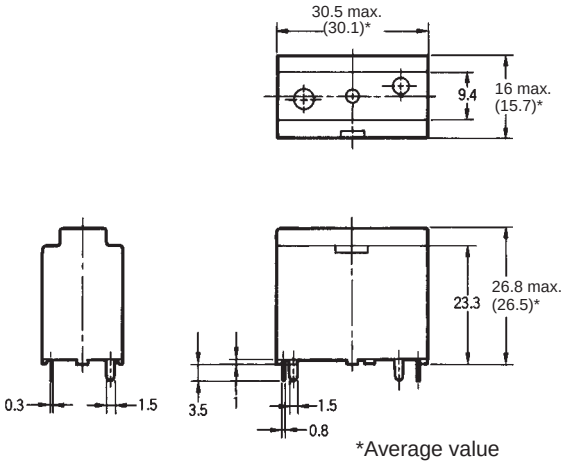

*Average value

Mounting Holes (Bottom View)

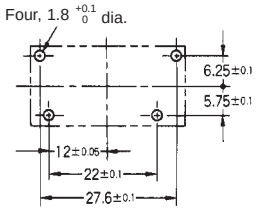

Terminal Arrangement /Internal Connections (Bottom View)

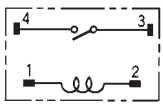

Precautions

Mounting

When mounting two or more relays side by side, provide a minimum space of 3 mm between relays.

Terminal Connection

The terminals fit FASTON receptacle 250 and are suitable for positive-lock mounting.

Do not apply excessive force on the terminals when mounting or dismounting the relay.

The following positive-lock connectors made by AMP are recommended.

Type	Receptacle terminals	Positive housing
#250 terminals (width: 6.35 mm)	AMP 170333-1 (170327-1) AMP 170334-1 (170328-1) AMP 170335-1 (170329-1)	AMP 172076-1 natural color AMP 172076-4 yellow AMP 172076-5 green AMP 172076-6 blue

Note: The numbers shown in parentheses are for air-feeding.

ALL DIMENSIONS SHOWN ARE IN MILLIMETERS.
To convert millimeters into inches, multiply by 0.03937. To convert grams into ounces, multiply by 0.03527.

Cat. No. J56-E1-2