IM5116

IMC3035-BPKG/US-100-DPS

Inductive sensors

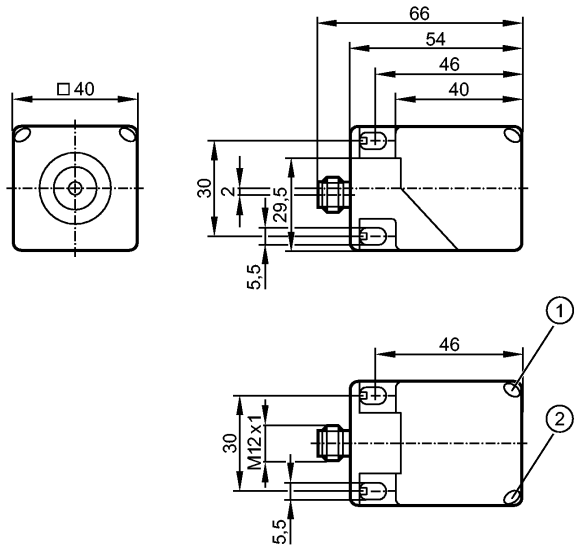

1: LED yellow
2: LED green

Made in Germany

Product characteristics		
Inductive sensor		
Rectangular, plastics		
Connector		
Sensing face in 5 positions selectable		
Sensing range 35 mm; [nf] non-flush mountable		
Electrical data		
Electrical design		DC PNP
Operating voltage	[V]	10...36 DC
Current consumption	[mA]	< 20
Protection class		II
Reverse polarity protection		yes
Outputs		
Output function		normally open
Voltage drop	[V]	< 2.5
Leakage current	[mA]	< 0.1
Current rating	[mA]	200
Short-circuit protection		pulsed
Overload protection		yes
Switching frequency	[Hz]	80
Range		
Sensing range	[mm]	35
Real sensing range (Sr)	[mm]	35 ± 10 %
Operating distance	[mm]	0...28.3
Accuracy / deviations		
Correction factors		mild steel = 1 / stainless steel approx. 0.7 / brass approx. 0.4 / Al approx. 0.4 / Cu approx. 0.3
Hysteresis	[% of Sr]	1...20

Switch-point drift	[% of Sr]	-10...10
Environment		
Ambient temperature	[°C]	-25...70
Protection		IP 67
Tests / approvals		
EMC		EN 61000-4-2 ESD: 8 kV CD / 6 kV AD EN 61000-4-3 HF radiated: 10 V/m (80...1000 MHz) EN 61000-4-4 Burst: 2 kV EN 61000-4-5 Surge: 0.5 kV (line to line, Ri: 2Ohm) EN 61000-4-6 HF conducted: 10 V (0.15...80 MHz) EN 55011: class B
MTTF	[Years]	1494
Mechanical data		
Mounting		non-flush mountable
Housing materials		PA (polyamide)
Weight	[kg]	0.153
Displays / operating elements		
Output status indication	LED	yellow
Operation	LED	green
Electrical connection		
Connection		M12 connector; rotatable, locking

Wiring



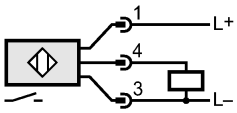

Remarks		
Remarks		cULus - Class 2 source required
Pack quantity	[piece]	1