E43326

O-ring

O-RG 18,72x2,62/FKM 5 PIECES

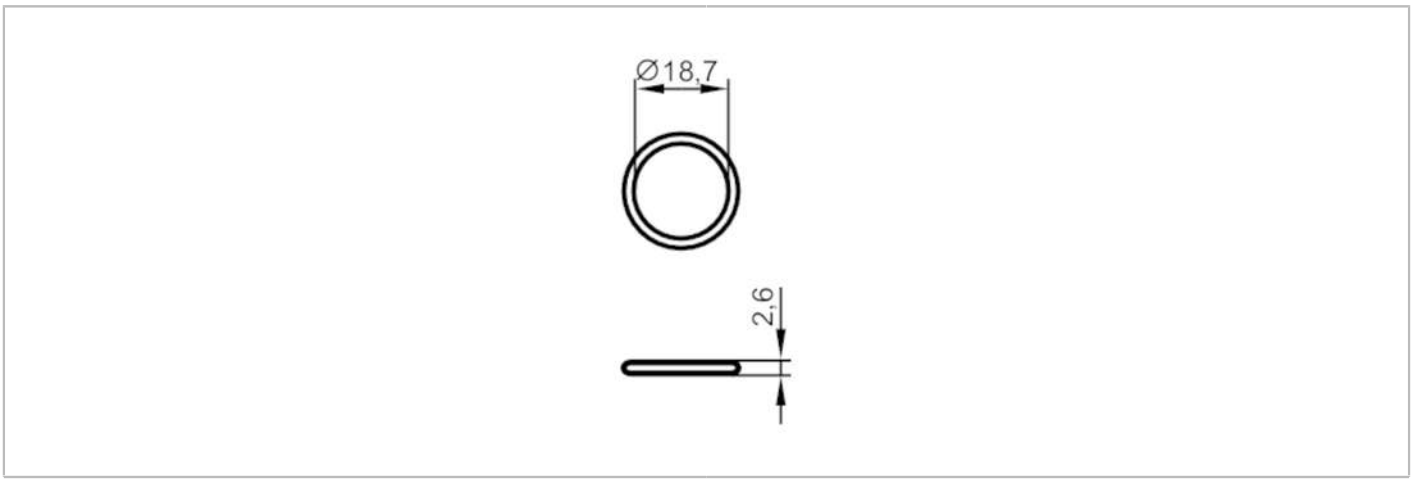

Mechanical data		
Weight	[g]	5.7
Inside diameter	[mm]	18.72
External diameter	[mm]	23.96
Materials		FKM
Remarks		
Pack quantity		5 pcs.