E10108

Wirable socket

SDOAH040PLSFKPG

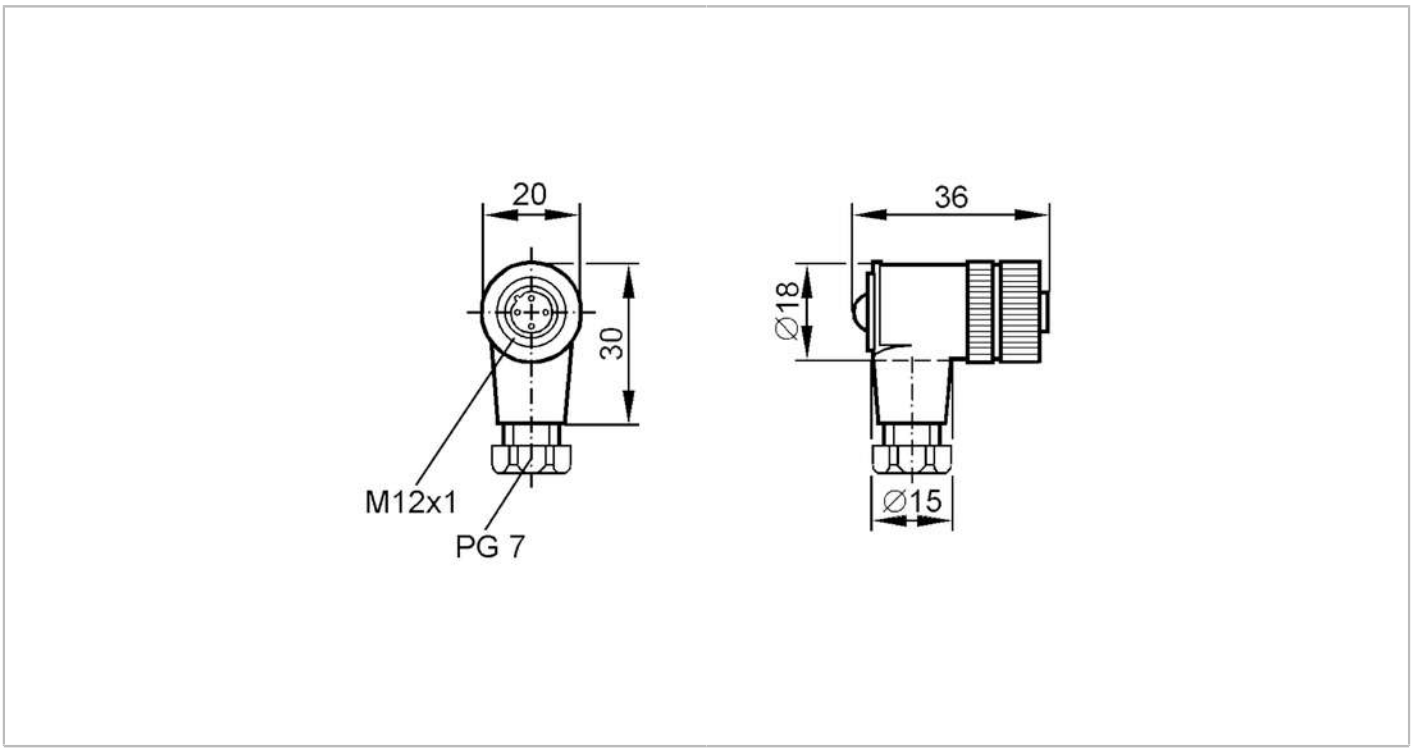

Electrical data		
Operating voltage	[V]	< 250 AC
Operating conditions		
Ambient temperature	[°C]	-40...85
Protection		IP 67
Mechanical data		
Weight	[g]	15.2
Dimensions	[mm]	36 x 20 x 30
Materials		PBT
Moulded-body material		PBT
Material nut		PA
Remarks		
Pack quantity		1 pcs.

E10108

Wirable socket

SDOAH040PLSFKPG

Electrical connection

screw terminals: ...0.5 mm²; Cable gland: PG 7

Electrical connection - socket

Connector: 1 x M12, angled; coding: B; Moulded body: PBT; Locking: PA



Connection

