# O8P203

## Retro-reflective sensor

O8P-DNKG/0,30M/AS/3P

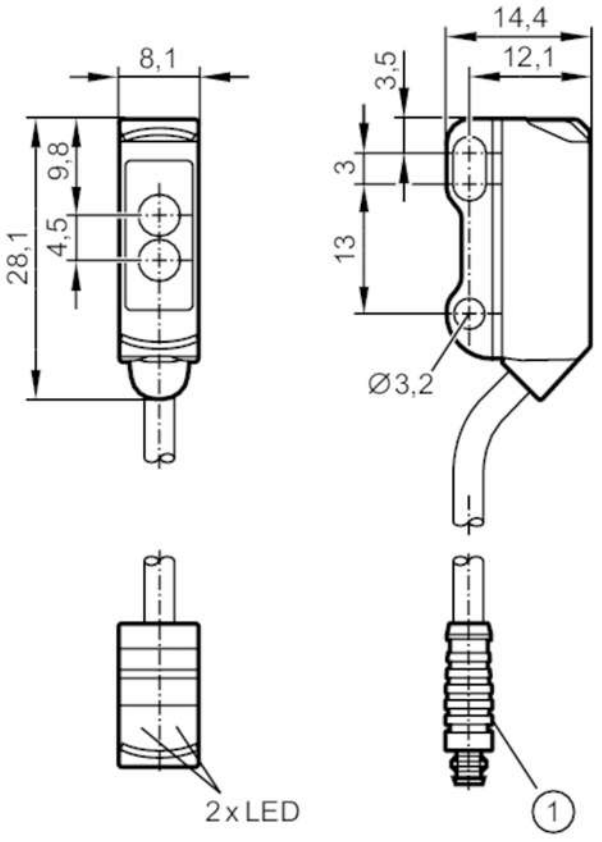


receiver in upper lens
transmitter in lower lens
1 illustration (example)

| | | |
|---|---|---|
| **Product characteristics** | | |
| Type of light | | red light |
| Housing | | rectangular |
| **Application** | | |
| Special feature | | polarisation filter |
| Function principle | | Retro-reflective sensor |
| **Electrical data** | | |
| Operating voltage | [V] | 10...30 DC |
| Current consumption | [mA] | 20;  ((24 V)) |
| Protection class | | III |
| Reverse polarity protection | | yes |
| Type of light | | red light |
| Wave length | [nm] | 633 |
| **Outputs** | | |
| Electrical design | | NPN |
| Output function | | dark-on mode |

# O8P203

## Retro-reflective sensor

O8P-DNKG/0,30M/AS/3P

| | | | |
|---|---|---|---|
| Max. voltage drop switching output DC | [V] | 2.5 | |
| Permanent current rating of switching output DC | [mA] | 100 | |
| Switching frequency DC | [Hz] | 1000 | |
| Short-circuit protection | | yes | |
| Type of short-circuit protection | | pulsed | |
| **Detection zone** | | | |
| Range referred to prismatic reflector | [m] | 0.02...1.8;  (Prismatic reflector Ø 30 E20004) | |
| Range adjustable | | no | |
| Max. light spot diameter | [mm] | 120 | |
| Light spot dimensions refer to | | at maximum range | |
| Polarisation filter available | | yes | |
| **Operating conditions** | | | |
| Ambient temperature | [°C] | -25...60 | |
| Protection | | IP 65; IP 67 | |
| **Tests / approvals** | | | |
| EMC | | EN 60947-5-2 | |
| MTTF | [years] | 1067 | |
| UL approval | | Ta | -25...60 °C |
| | | Enclosure type | Type 1 |
| | | power supply | Limited Voltage/Current |
| | | UL Approval no. | E015 |
| | | File number UL | E174191 |
| **Mechanical data** | | | |
| Weight | [g] | 21.2 | |
| Housing | | rectangular | |
| Dimensions | [mm] | 28.1 x 8.1 x 14.4 | |
| Materials | | housing: ABS; stainless steel (316L/1.4404) | |
| Lens material | | PMMA | |
| Lens alignment | | side lens | |
| **Displays / operating elements** | | | |
| Display | | switching status | 1 x LED, yellow |
| | | operation | 1 x LED, green |
| **Remarks** | | | |
| Pack quantity | | 1 pcs. | |

# O8P203

## Retro-reflective sensor

**O8P-DNKG/0,30M/AS/3P**

## Electrical connection

Cable: 0.3 m, PVC, black, Ø 2.9 mm; 3 x 0.08 mm²

Connector: 1 x M8; coding: A

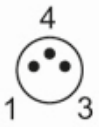


### Connection

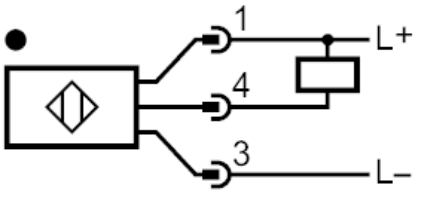


## Diagrams and graphs

excess gain graph

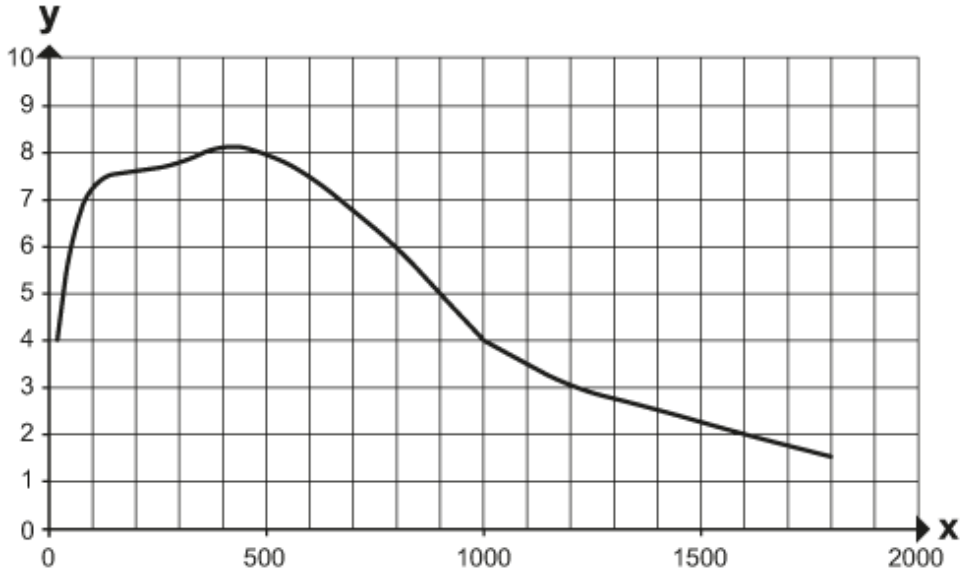


x: distance [mm]

y: excess gain factor