MURR ELEKTRONIK
stay connected

MSUD valve plug BI-11mm 180° with cable

PVC 3x0.75 bk 5m

MSUD
Form BI (11 mm)
24 V AC ±20% / DC ±25%
LED and suppression
PE opposite cable entry (180°)
Attention: Contact carrier turned to 180°!
Further cable lengths on request.
Plastic housings with good resistance against chemicals and oils.
The resistance to aggressive media should be individually tested for your application. Further details on request.

Link to Product

Illustration



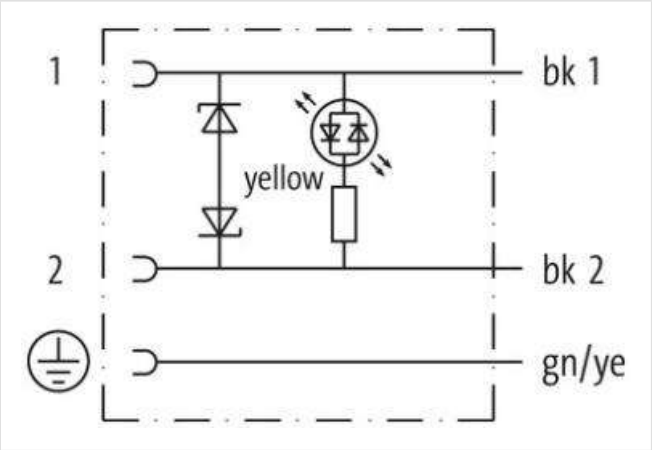

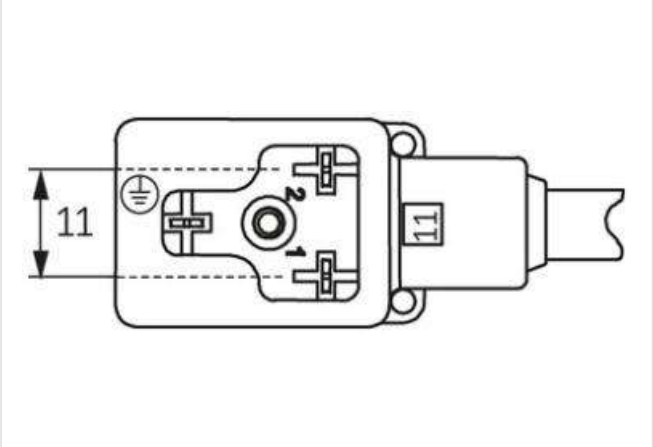

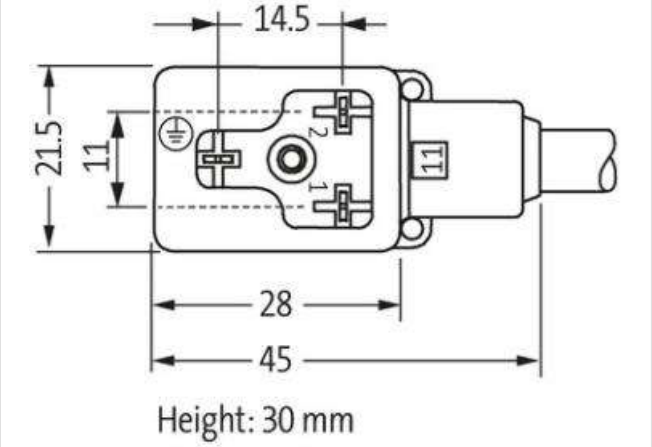

Product may differ from Image

Form

Form	11081

The information in this brochure has been compiled with the utmost care.
Liability for the correctness completeness and topicality of the information is restricted to gross negligence. Version: 2023-03-17

MURR ELEKTRONIK
stay connected

Technical Data	
Operating voltage	24 V AC ±20% / DC ±25%
Rated surge voltage	0.8 kV
Operating current per contact	max. 4 A
Current consumption	max. 15 mA
Material group	IEC 60664-1, category I
Switch off peak	max. 55 V
LED display	yellow
Locking of ports	M3 (recommended torque 0.4 Nm)
Protection	IP67 inserted and tightened (EN 60529)
Material	PBT
Locking material	Steel (galvanized)
Housing	Black plastic (gray on request)
Additional suppressor	Diode/Z-Diode
Switch off delay time	max. 20 ms
General data	
Material gasket	PUR
Pollution Degree	3
Temperature range	-25...+85 °C, depending on cable quality
Cables	
Cable identification	616
Cable Type	1 (PVC)
Approval (cable)	CE conform
Cable weight [g/m]	61,6 g
Material wire	Cu wire, bare
Resistor (core)	max. 26 Ω/km (20 °C)
Single wire Ø (core)	0.2 mm
Construction (core)	24× 0.2 mm (multi-strand wire class 5)
Diameter (core)	3× 0.75 mm²
AWG	similar to AWG 18
Material wire isolation	PVC
Material property (wire isolation)	CFC-, cadmium-, silicone- and lead-free
Shore hardness (wire isolation)	43 ±5 D
Wire-Ø incl. isolation	1.8 mm ±5%
Color/numbering of wires	bk numbered, gnye longitudinally striped
Stranding combination	3 wires twisted
Shield	no
Material jacket	PVC
Material property (jacket)	CFC-, cadmium-, silicone- and lead-free
Shore hardness (jacket)	80 ±5 A
Outer-Ø (jacket)	5.9 mm ±5%
Color (jacket)	black
chemical resistance	good resistance to oil, gasoline and chemicals
Nominal voltage	300/500 V AC
Test voltage	3000 V AC
Current load capacity	to DIN VDE 0298-4
Temperature range (fixed)	-30...+70 °C
Temperature range (mobile)	-5...+70 °C
Bend radius (fixed)	5× outer Ø
Bend radius (moving)	10× outer Ø
Product article number of manufacturer	7000-11081-6160500
Cable length	5 m

The information in this brochure has been compiled with the utmost care.
Liability for the correctness completeness and topicality of the information is restricted to gross negligence. Version: 2023-03-17