AERASGARD® RCO2 - W
AERASGARD® RCO2 - SD

Room CO2 sensor and measuring transducer, self-calibrating, with multi-range switching and active / switching output

S+S REGELTECHNIK

Maintenance-free room sensor **AER**ASGARD® **RCO2 - SD** with active output, automatic calibration (fixed), in an elegant plastic housing with snap-on lid, for determining the CO2 content of the air (0...2000 ppm). The measuring transducer converts the measured values into a standard signal of 0 -10 V.

Maintenance-free room sensor **AER**ASGARD® **RCO2 - W** with active/switching output, automatic calibration (can be deactivated), in an elegant plastic housing with snap-on lid, optional with traffic light indicator (five coloured LEDs), for determining the CO2 content of the air (0...2000 ppm/0...5000 ppm). The measuring transducer converts the measured values into a standard signal of 0 -10 V or 4...20 mA (switchable).

The sensor is used in offices, hotels, convention centres, apartments, shops, etc. for the purpose of evaluating the indoor climate. This enables energy-saving room ventilation on an as-needed basis, thereby reducing operating costs and improving well-being. One sensor for every 30 m² of room area is recommended.

The CO2 measurement is performed using an optical **NDIR sensor** (non-dispersive infra-red technology). The detection range is calibrated for standard applications such as monitoring residential rooms and conference rooms.

For more information, see the start of the chapter.

TECHNICAL DATA

Power supply:	24 V AC / DC (± 10 %)
Power consumption:	< 1.5 W / 24 V DC typical; < 2.9 VA / 24 V AC typical; peak current 200 mA
Sensor:	Optical NDIR sensor (non-dispersive infra-red technology), with manual calibration (via zero button), **RCO2 - SD** with automatic calibration (fixed) **RCO2 - W** with automatic calibration (can be deactivated via DIP switches)
Measuring range:	**RCO2 - SD** 0...2000 ppm (fixed) **RCO2 - W** 0...2000 ppm **or** 0...5000 ppm (selectable via DIP switches)
Output:	**RCO2 - SD** 0 -10 V (fixed) **RCO2 - W** 0 -10 V **or** 4...20 mA, working resistance < 800 Ω (selectable via DIP switches), with offset potentiometer (± 10 % of the measuring range)
Relay output:	**RCO2 - SD** without changeover contact **RCO2 - W** with potential-free **changeover contact** (24 V / 1 A)
Measuring accuracy:	typically ± 30 ppm ± 3 % of measured value
Temperature dependence:	± 5 ppm / °C or ± 0.5 % of measured value / °C (whichever is higher)
Pressure dependence:	± 0.13 % / mm Hg
Long-term stability:	< 2 % in 15 years
Gas exchange:	by diffusion
Ambient temperature:	0...+ 50 °C
Warm up time:	approx. 1 hour
Response time:	< 2 minutes
Electrical connection:	0.14 - 1.5 mm², via screw terminals
Housing:	plastic, material ABS, colour pure white (similar to RAL 9010), stainless steel housing optional **V2A** (1.4301)
Dimensions:	85 x 85 x 27 mm (Baldur 1) 100 x 100 x 25 mm (stainless steel)
Installation:	wall mounting or on in-wall flush box, Ø 55 mm, base with 4-hole for mounting on vertically or horizontally installed in-wall flush boxes for cable entry from the back, with predetermined breaking point for on-wall cable entry from top / bottom in case of plain on-wall installation
Protection class:	III (according to EN 60 730)
Protection type:	**IP 30** (according to EN 60 529)
Standards:	CE conformity, electromagnetic compatibility according to EN 61 326, EMC Directive 2014 / 30 / EU, Low Voltage Directive 2014 / 35 / EU
Optional:	**with traffic light indicator** (five coloured LEDs, see table) for displaying the CO2 concentration **with display** (see **AER**ASGARD® **RFTM-LQ-CO2**) for displaying the actual CO2 content in ppm

S+S REGELTECHNIK

AERASGARD® RCO2-W
AERASGARD® RCO2-SD

Room CO2 sensor and measuring transducer, self-calibrating, with multi-range switching and active/switching output

Dimensional drawing

RCO2-W
RCO2-SD

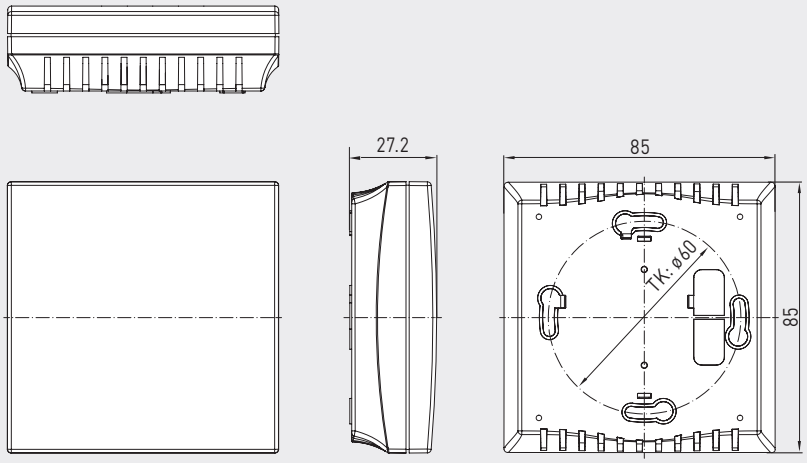

RCO2-W
RCO2-SD



Dimensional drawing

RCO2-W VA

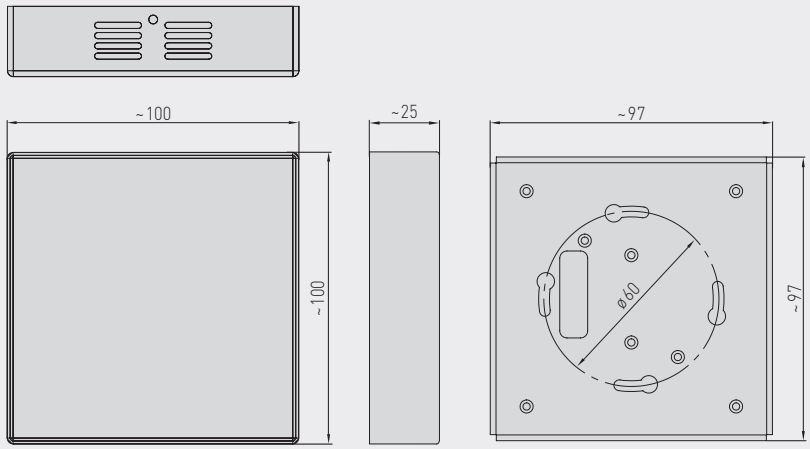

RCO2-W VA
(stainless steel housing)



AERASGARD® RCO2-W
AERASGARD® RCO2-SD

Room CO2 sensor and measuring transducer, self-calibrating, with multi-range switching and active/switching output

S+S REGELTECHNIK

Connecting diagram **RCO2-W**

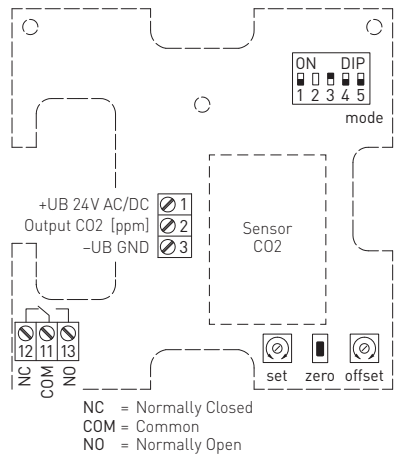

NC = Normally Closed
COM = Common
NO = Normally Open

Connecting diagram **RCO2-SD**

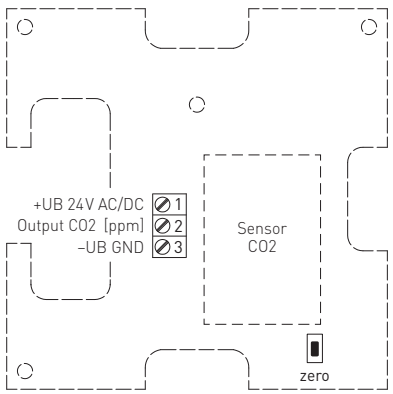

Schematic diagram **RCO2-W**

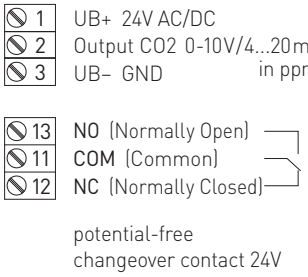

Schematic diagram **RCO2-SD**

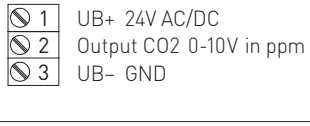

DIP switches	RCO2-W
CO2 content	**DIP 1**
0...2000 ppm (default)	OFF
0...5000 ppm	**ON**
CO2 automatic zero point	**DIP 3**
deactivated	OFF
activated (default)	**ON**
Output	**DIP 4**
Voltage 0-10 V (default)	OFF
Current 4...20 mA	**ON**
Traffic light (5x LEDs)	**DIP 5**
deactivated	OFF
activated	**ON**
Note: **DIP 2** is not assigned!	

S+S REGELTECHNIK

AERASGARD® RCO2-W
AERASGARD® RCO2-SD

Room CO2 sensor and measuring transducer, self-calibrating, with multi-range switching and active/switching output

Traffic light indicator						RCO2-W-A
CO2 content in ppm 0...2000 ppm	0...5000 ppm	**LED 1** green	**LED 2** green	**LED 3** yellow	**LED 4** yellow	**LED 5** red
350	350	20 %	–	–	–	–
416	536	40 %	–	–	–	–
482	722	60 %	–	–	–	–
548	908	80 %	–	–	–	–
614	**1094**	**100 %**	–	–	–	–
680	1280		20 %	–	–	–
746	1466		40 %	–	–	–
812	1652		60 %	–	–	–
878	1838		80 %	–	–	–
944	**2024**		**100 %**	–	–	–
1010	2210			20 %	–	–
1076	2396			40 %	–	–
1142	2582			60 %	–	–
1208	2768			80 %	–	–
1274	**2954**			**100 %**	–	–
1340	3140				20 %	–
1406	3326				40 %	–
1472	3512				60 %	–
1538	3698				80 %	–
1604	**3884**				**100 %**	–
1670	4070					20 %
1736	4256					40 %
1802	4442					60 %
1868	4628					80 %
1934	**4814**					**100 %**
2000	5000					

Once the aforementioned values have been reached, the respective LED becomes active (with increasing luminosity of 20 %, 40 %, 60 %, 80 % and 100 %);
LEDs that are already active continue to be illuminated.

RCO2-W-A
with LEDs



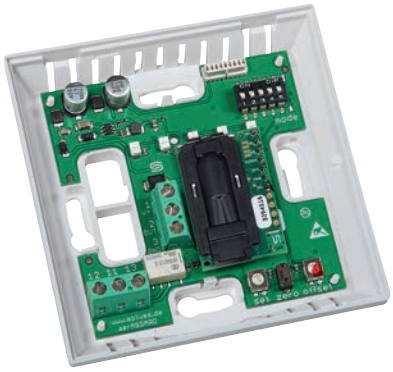

AERASGARD® RCO2-SD Room CO2 sensor and measuring transducer, *Standard*
AERASGARD® RCO2-W Room CO2 sensor and measuring transducer, *Premium*

Type / WG02	Measuring Range CO2	Output CO2	Equipment	Display	Item No. (Baldur 1)	Price
RCO2-SD	(fixed)	(fixed)				
RCO2-SD-U	0...2000 ppm	0-10 V	–		1501-61A0-1001-200	**216,00 €**
RCO2-W	(switchable)	(switchable)				
RCO2-W	0...2000 ppm / 0...5000 ppm	0-10 V / 4...20 mA	Changeover contact		1501-61A0-7301-200	**255,89 €**
RCO2-W VA	0...2000 ppm / 0...5000 ppm	0-10 V / 4...20 mA	Changeover contact, stainless steel housing		1501-61A0-7301-205	**365,72 €**
RCO2-W LCD	0...2000 ppm / 0...5000 ppm	0-10 V / 4...20 mA	Changeover contact, display	■	see **RFTM-LQ-CO2**	
RCO2-W-A	(switchable)	(switchable)			**with traffic light**	
RCO2-W-A	0...2000 ppm / 0...5000 ppm	0-10 V / 4...20 mA	Changeover contact, LEDs		1501-61A0-7331-200	**300,73 €**
	A = with "traffic light" (five coloured LEDs) for displaying the CO2 concentration.					
Note:	This unit **must not** be used as safety-relevant device!					