24560-378 PRINTED CIRCUIT BOARD HANDLE C

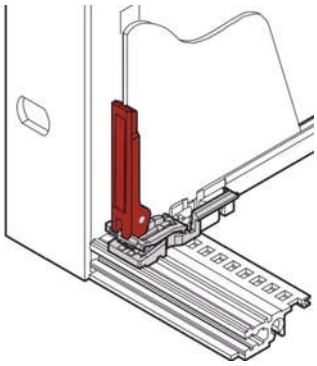

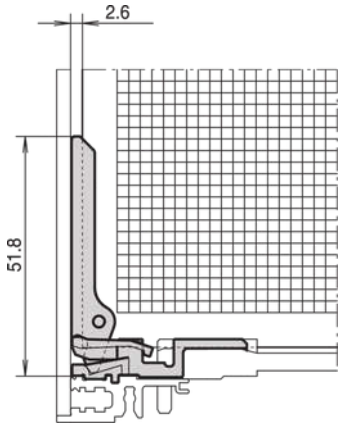

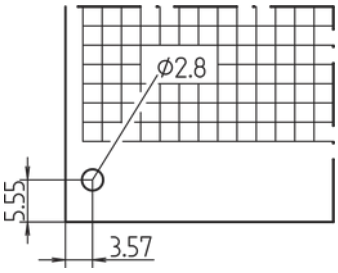

KEY FEATURES

- Mounts behind front panel
- For EuropacPRO, MultipacPRO, RatiopacPRO, PropacPRO and CompacPRO
- Can only be used with board retainer 24560-377

PRODUCT ATTRIBUTES

- Product Type: Handle
- Type: Static
- Works With: Subracks; Cases
- Handle Type: Board Locking
- Material: Polybutylene Terephthalate
- Color: Red
- Flammability Rating: UL® 94V-0
- Package Quantity: 10

ADDITIONAL PRODUCT DETAILS

The PCB handle enables a user to extract a PCB without a front panel.

CERTIFICATIONS



North America
All locations
+1.763.422.2661
Chat with us:
schroff.nvent.com

Europe
Straubenhardt, Germany
+49.7082.794.0
Betschdorf, France
+33.3.88.90.64.90
Warsaw, Poland
+48.22.209.98.35
Assago, Italy
+39.02.932.7141
Chat with us:
schroff.nvent.com

Asia
Shanghai, China
+86.21.2412.6943
Qingdao, China
+86.532.8771.6101
Singapore
+65.6768.5800
Shin-Yokohama, Japan
+81.45.476.0271
Chat with us:
schroff.nvent.com

Middle East & India
Dubai, United Arab Emirates
+971.4.378.1700
Bangalore, India
+91.80.6715.2001
Istanbul, Turkey
+90.216.250.7374
Chat with us:
schroff.nvent.com



Our powerful portfolio of brands:
nVent.com **CADDY ERICO HOFFMAN RAYCHEM SCHROFF TRACER**

© 2024 nVent. All nVent marks and logos are owned or licensed by nVent Services GmbH or its affiliates. All other trademarks are the property of their respective owners.

nVent reserves the right to change specifications without notice.