IGC235

Inductive AS-Interface sensor

IGK2012-ASI /M/US-104

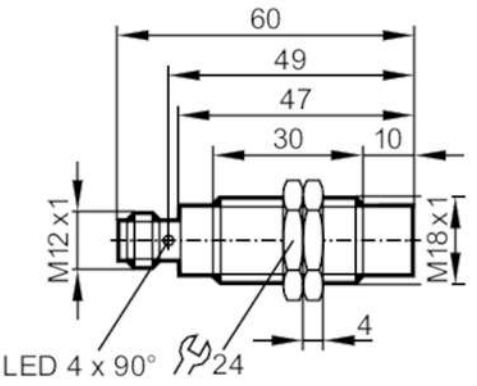

Product characteristics		
Electrical design		AS-i
Sensing range	[mm]	12
Housing		threaded type
Dimensions	[mm]	M18 x 1 / L = 60
Application		
Special feature		Gold-plated contacts
Application		Use in machine tools, coolants and lubricants
Electrical data		
Operating voltage	[V]	26.5...31.6 DC
Current consumption	[mA]	< 30
Protection class		III
Reverse polarity protection		yes
Max. power-on delay time	[ms]	1000
Outputs		
Electrical design		AS-i
Switching frequency DC	[Hz]	100
Detection zone		
Sensing range	[mm]	12
Real sensing range Sr	[mm]	12 ± 10 %
Operating distance	[mm]	0...9.7
Accuracy / deviations		
Correction factor		steel: 1 / stainless steel: 0.7 / brass: 0.5 / aluminium: 0.45 / copper: 0.35
Hysteresis	[% of Sr]	1...20
Switch point drift	[% of Sr]	-10...10
Operating conditions		
Ambient temperature	[°C]	-25...70
Protection		IP 68; ("Coolant")

IGC235

Inductive AS-Interface sensor

IGK2012-ASI /M/US-104

Tests / approvals			
EMC	EN 61000-4-2 ESD	4 kV CD / 8 kV AD	
	EN 61000-4-3 HF radiated	10 V/m	
	EN 61000-4-4 Burst	2 kV	
	EN 61000-4-6 HF conducted	10 V	
	EN 55011	class B	
MTTF [years]	1565		
UL approval	Ta	-25...70 °C	
	Enclosure type	Type 1	
	power supply	Limited Voltage/Current	
	File number UL	E174191	

AS-i classification					
AS-i version	2.1				
Extended addressing mode	yes				
AS-i I/O configuration [hex]	0				
AS-i ID code [hex]	A.F				
AS-i certificate	57301				
Assignment of the data bits	Designation	switching signal	not used	not used	not used
	status = 0	target outside the active zone	-	-	-
	status = 1	target within the active zone	default value	default value	default value

Mechanical data	
Weight [g]	46.4
Housing	threaded type
Mounting	non-flush mountable
Dimensions [mm]	M18 x 1 / L = 60
Thread designation	M18 x 1
Materials	threaded sleeve: stainless steel (1.4404 / 316L); sensing face: LCP uncoloured; lock nuts: brass

Displays / operating elements		
Display	switching status	4 x 90° LED, yellow
	function	1 x LED, red

Accessories	
Items supplied	lock nuts: 2

Remarks	
Pack quantity	1 pcs.

Electrical connection - plug

Connector: 1 x M12; coding: A; Contacts: gold-plated

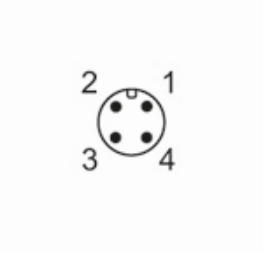

IGC235

Inductive AS-Interface sensor

IGK2012-ASI /M/US-104

Connection

