Brand of NTN corporation

Technical data

UKP206H

Bearing units



Grey cast housing, radial insert ball bearing with adapter sleeve,seal with slinger

KIT CONTENT

UK206G2H, P206

VISUAL (S)

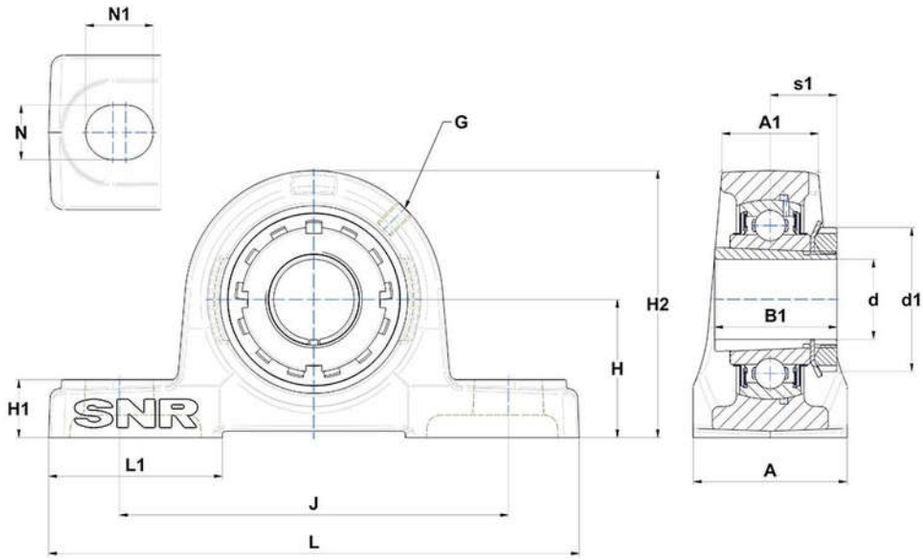

PRODUCT DEFINITION

Brand	SNR
A - Housing width	48 mm
A1 - Housing top width	30 mm
B - Width of Inner Ring	25 mm
d - Shaft diameter	25 mm
d1 - Outer dia of eccent. Lock. collar / nut of adapter sleeve	45 mm

PRODUCT DEFINITION	
G - Grease fitting	M6x1
H - Distance mounting base to centerline spheric. seating diam.	42,9 mm
H1 - Housing foot height	18 mm
H2 - Housing height	83 mm
J - Mounting holes distance	121 mm
L - Housing length	165 mm
L1 - Housing foot length	54 mm
N - Mounting hole dimension	17 mm
N1 - Mounting hole length	21 mm
s1 - Distance nut to middle of bearing raceway	20,5 mm

PRODUCT PERFORMANCE	
C - Dynamic load rating	19500000 mN
C0 - Static load rating	11200000 mN
Operating temperature min.	253,15 °K
Operating temperature max.	373,15 °K

OTHER FEATURES	
Mass	1,41 kg
Adapter sleeve designation	H2306