MINISTART Softstarter IR 9027

0222101

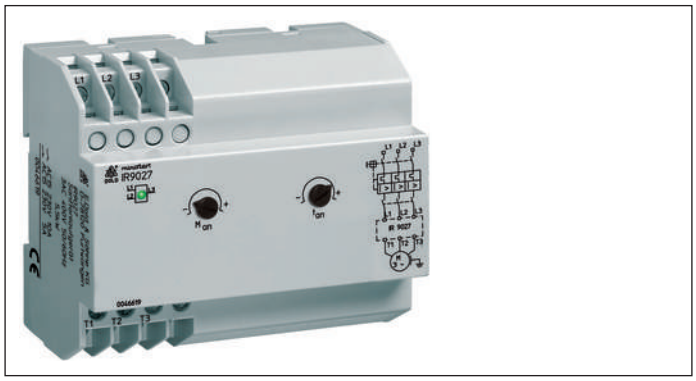

- According to IEC/EN 60 947-4-2
- Increases the life of squirrel cage motors and mechanical drives
- Easily fitted to existing installations
- 2-phase control
- For motors up to 5.5 kW
- Start current limited to 2 to 3 times rated motor current
- Semiconductors are brigded after softstart
- Adjustable ramp time and starting torque
- LED indication
- DIN-rail mounting
- 105 mm width

Function Diagram

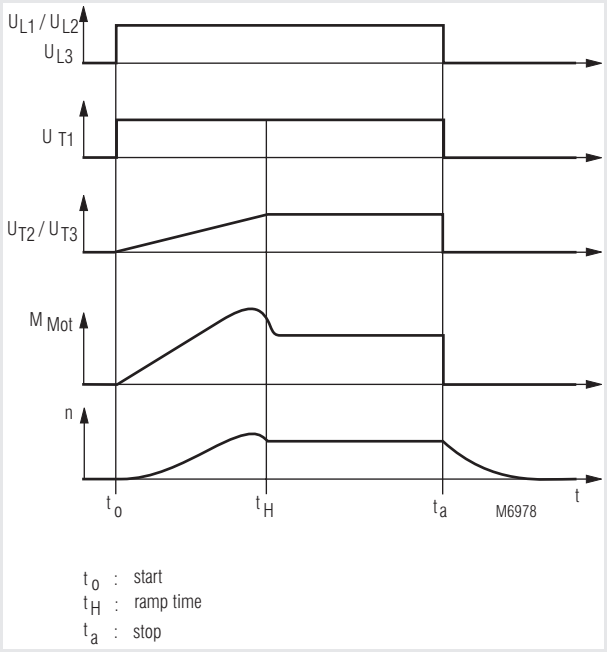

Block Diagram

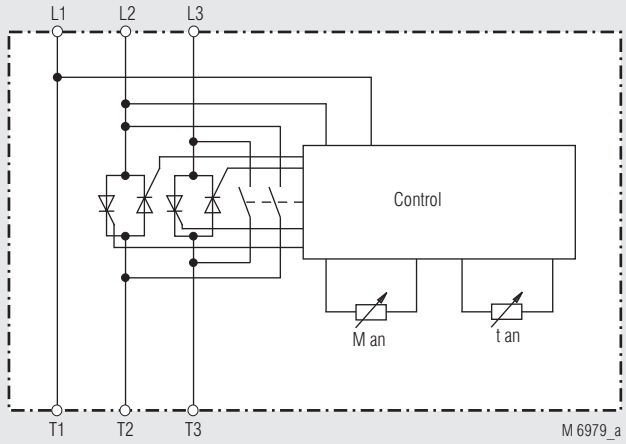

Approvals and Markings

CE

Applications

- Motors with gear, belt or chain drive
- Fans, pumps, compressors, conveyor systems
- Door drives, packaging machines
- Start current limiting on 3-phase motors

Function

Softstarts are electronic devices designed to enable 1-phase or 3-phase induction motors to start smoothly. IR 9027 slowly ramps up the current on two phases, therefore allowing the motor torque to build up slowly. This reduces the mechanical stress on the machine, prevents damage to conveyed material and limits the start current. When the motor is up to full speed the semiconductors in IR 9027 are bridged to prevent internal power losses and heat build up.

Indication

LED green ON = power connected

Principle of Operation

For direct on line or start delta applications, terminals L1, L2, L3 are connected to the mains contactor, with the motor connected to terminals T1, T2, T3.
As soon as power is connected to terminals L1, L2, L3 the softstart will commence. Potentionmeter "t an" (1-10 sec.) adjusts the ramp time (time the motor takes to get to full speed) and potentiometer "M an" adjusts the start voltage (30 - 70 % nomV). When the softstart is complete the internal semiconductors are automatically brigded.

Notes

To allow softstarting the motor load must always be connected as continuous operation of the softstart with no load may cause overheating of the motor and softstart.
It is recommended that the softstart is protected by superfast semiconductor fuses rated as per the current rating to the softstart or motor. However, standard line and motor protection is acceptable, but for high starting frequencies motor winding temperature monitoring is recommended. The softstarter must not be operated with a capacitive load, such as reactive power compensation, at the output.

All technical data in this list relate to the state at the moment of edition. We reserve the right for technical improvements and changes at any time.

Technical Data

Nominal voltage U_N:	3 AC 400 V + 10 % - 20 %	
Nominal frequency:	50/60 Hz	
Nominal motor power P_N		
400 V:	5.5 kW	
Min. motor power:	approx. 300 W	
Start torque:	30 ... 70 %	
Ramp time:	0.1 ... 10 s	
Recovery time:	100 ms	
Switching frequency:	(3 x I_N, T_{AN} = 10 s, ϑ_U = 20 °) up to 3 kW 36 switching cycles / h (3 x I_N, T_{AN} = 10 s, ϑ_U = 20 °) from 3 kW to 5.5 kW 20 switch.cycles / h	
Power consumption:	3.5 VA	
Short-circuit protection:		
Mode 1:	gG 32 A	
Mode 2:	semiconductor fuse max. 610 A^2s e.g. A60Q30-2	

General Data

Nominal operating mode:	Continuous operation	
Temperature range		
Operation:	0 ... + 50 °C	
Storage:	- 25 ... + 75 °C	
Relative air humidity:	95 %	
Altitude:	< 2.000 m	
Clearance and creepage distances		
Rated impuls voltage / pollution degree:	4 kV / 2	IEC 60 664-1
Overvoltage category:	III	
EMC		
Electrostatic discharge:	8 kV (air) 6 kV (contact)	IEC/EN 61000-4-2 IEC/EN 61000-4-2
HF-irradiation		
80 MHz ... 1 GHz:	10 V / m	IEC/EN 61000-4-3
1 GHz ... 2,7 GHz:	10 V / m	IEC/EN 61000-4-3
Fast transients:	4 kV	IEC/EN 61 000-4-4
Surge voltage between		
wires for power supply:	1 kV	IEC/EN 61 000-4-5
between wire and ground:	2 kV	IEC/EN 61 000-4-5
HF wire guided:	10V	IEC/EN 61000-4-6
Interference suppression:	Limit value class A*) *) The device is designed for the usage under industrial conditions (Class A, EN 55011). When connected to a low voltage public system (Class B, EN 55011) radio interference can be generated. To avoid this, appropriate measures have to be taken.	
Degree of protection:		
Housing:	IP 40	IEC/EN 60 529
Terminals:	IP 20	IEC/EN 60 529
Housing:	Thermoplastic with V0 behavior according to UL subject 94	
Vibration resistance:	Amplitude 0.35 mm Frequency 10 ... 55 Hz, IEC/EN 60 068-2-6	
Climate resistance:	20 / 050 / 04	IEC/EN 60 068-1
Klemmenbezeichnung:	EN 50 005	
Terminal designation:	2 x 2,5 mm^2 solid 2 x 1,5 mm^2 stranded wire with sleeve DIN 46 228-1/-2/-3/-4	
Wire fixing:	Flat terminals with self-lifting clamping piece	IEC/EN 60 999-1
Fixing torque:	0.8 Nm	
Mounting:	DIN rail	IEC/EN 60 715
Weight:	430 g	

Dimensions

Width x height x depth:	105 x 90 x 59 mm

Standard Type

IR 9027 3 AC 400 V 5.5 kW	50/60 Hz
Article number:	0046619
• Nominal voltage U_N:	3 AC 400 V
• For nominal motor power up to 5.5 kW	
• Width:	105 mm

Installation

This units must be mounted on a vertical mounting area with the connections in a vertical plane, i.e. top to bottom.
Ensure that no external heat source is placed below the unit and a 40 mm air gap is maintained above and below. Other devices may be directly mounted either side of the unit.

Setting facilities

Ramp up time:	with potentiometer "t_{an}" the ramp up time until the Triacs are bridged can be adjusted between 0.1 and 10 s..
Starting torque:	with potentiometer "M_{an}" the starting torque can be adjusted between 0 and 75% of the maximum value.

Set-up Procedure

1. Set potentiometer "M_{an}" to minimum (fully anti-clockwise).
   Set potentiometer "t_{an}" to maximum (fully clockwise)
2. Start the motor and turn potentiometer "M_{an}" up until the motor starts to turn without excessive humming. Stop the motor and restart.
3. Adjust potentiometer "t_{an}" to give the desired ramp time.
   Stop and restart the motor, readjusting the potentiometers until the desired starting characteristics are achieved.

- Attention: If the ramp-up time is adjusted to short, the internal bridging contact closes before the motor is on full speed.
This may damage the bridging contactor or bridging relay.

Safety Notes

- Never clear a fault when the device is switched on.
- The user must ensure that the device and the necessary components are mounted and connected according to the locally applicable regulations and technical standards.
- Adjustments may only be carried out by qualified specialist staff and the applicable safety rules must be observed.

Application Example

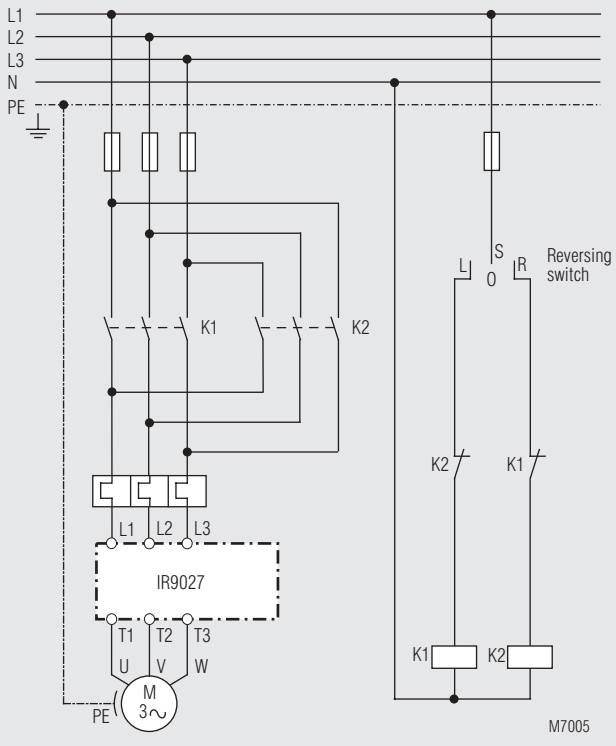

IR 9027 connected to a 3-phase induction motor with reversing