Technical datasheet



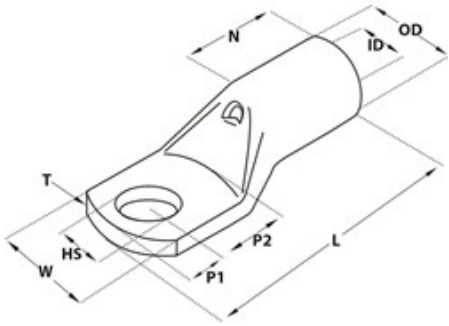

120-16

E0845084

Cable Lug KRF, 120mm2, M16

Product Properties:

Suitable for Class 5 conductor	Yes
Suitable for Class 6 conductor	Yes
Insulated	No
Max. current (Imax)	334 A
Number of mounting holes	1 .
Flange shape	Ring shape
Colour insulation	Other
Slender flange model	No
With sight-hole	Yes
Conductor category	Several
Max Temp	150 °C
Surface protection	Tinned
Material	Copper
Connecting angle	180° (horizontal)
Series	KRF/KSF (10-500mm2)

Dimensions:

HS	17 mm
ID	17 mm
OD	22 mm
T	5 mm
L	72 mm

N	25 mm
W	32 mm
MOQ	25 .
Unit	pcs
Bolt dimension (metric)	16 .
Nominal cross section	120 mm²
Series	KRF/KSF (10-500mm2)

Approvals:

Approved according to CE	Yes
Approved according to UKCA	Ja
Approved according to DNV	Yes

Compliance:

Conflict Minerals	Contain "Tin"
Extended Minerals	Contain "Copper"
PFAS	No PFAS
REACH	No SVHC (Latest. 05 Nov 2025)
RoHS	RoHS 3 (2015/863)
SCIP	Not Applicable

Other information:

ETIM-Class	EC001051 - Tube cable lug for copper conductors
ETIM-Release	9.0
Trademark	NEMIQ
Product Group	Cable lugs
Search Description	EFO2024V
Alternative SKU	120-16
E-no	E0845084

Logistic information:

Barcode	733117611950
Country of origin	CN
E-no	E0845084
Item status	Stock item, normally in stock with reservation for in between sales.
MOQ	25 .
Stock code	120-16
Taric code	85369010
Unit	pcs

*We reserve the right to make technical changes and disclaim any typographical errors.