PP2001

Programming/display unit

PP-PRG- /QFRKG/US/ /

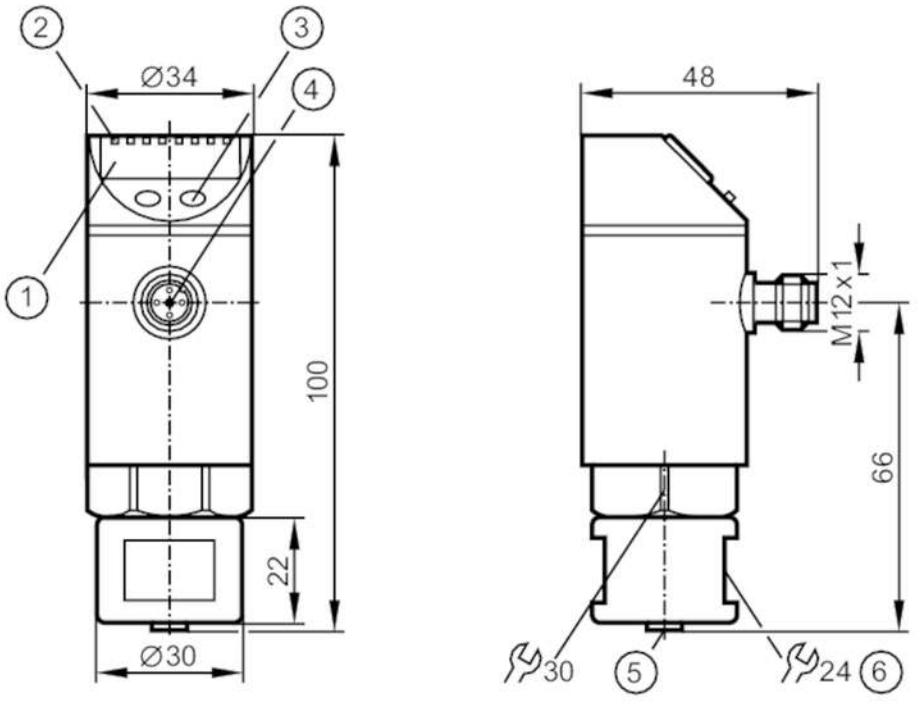

1 alphanumeric display 4-digit
2 LEDs Display unit / switching status
3 programming button
4 connection for voltage supply and output signals
5 connection for sensor
6 mounting nut

Application		
Special feature		Gold-plated contacts
Application		for industrial applications
Electrical data		
Operating voltage	[V]	18...32 DC
Current consumption	[mA]	< 40
Min. insulation resistance	[MΩ]	100; (500 V DC)
Protection class		III
Reverse polarity protection		yes
Power-on delay time	[s]	1.5...10; (depending on the connected sensor)
Outputs		
Max. voltage drop switching output DC	[V]	2
Permanent current rating of switching output DC	[mA]	250
Short-circuit protection		yes
Type of short-circuit protection		pulsed
Overload protection		yes

PP2001

Programming/display unit

PP-PRG- /QFRKG/US/ /

Response times			
Max. measuring/display cycle	[ms]	200	
Software / programming			
Parameter setting options		depending on the connected sensor	
Operating conditions			
Ambient temperature	[°C]	-25...80	
Storage temperature	[°C]	-40...100	
Protection		IP 67; (for unit with screwed-on connectors)	
Tests / approvals			
EMC		EN 61000-4-2 ESD	4 kV CD / 8 kV AD
		EN 61000-4-3 HF radiated	10 V/m
		EN 61000-4-4 Burst	2 kV
		EN 61000-4-6 HF conducted	10 V
Shock resistance		DIN IEC 68-2-27	50 g (11 ms)
Vibration resistance		DIN IEC 68-2-6	20 g (10...2000 Hz)
MTTF	[years]	229	
Mechanical data			
Weight	[g]	333.5	
Dimensions	[mm]	100 x 34 x 48	
Materials		stainless steel (1.4404 / 316L); CO-PC; PBT; FKM	
Displays / operating elements			
Display		Display unit	6 x LED, green
		switching status	2 x LED, yellow
		function display	alphanumeric display, 4-digit
		measured values	alphanumeric display, 4-digit
Accessories			
Items supplied		jumper cables: 0,8 m, for parameter setting in the offline mode	
Remarks			
Pack quantity		1 pcs.	
Electrical connection			
Connection			

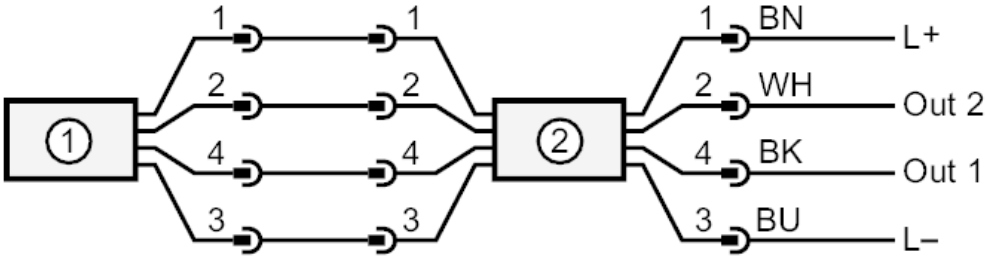

1 = sensor
2 = PP2001

PP2001

Programming/display unit

PP-PRG- /QFRKG/US/ /

Connector: 1 x M12; Contacts: gold-plated