RoHS Compliant

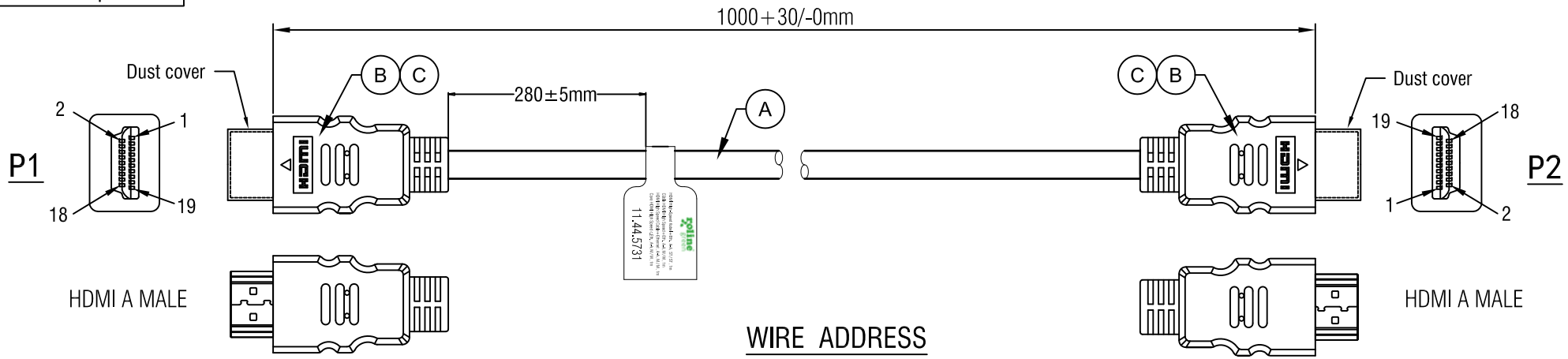

WIRE ADDRESS

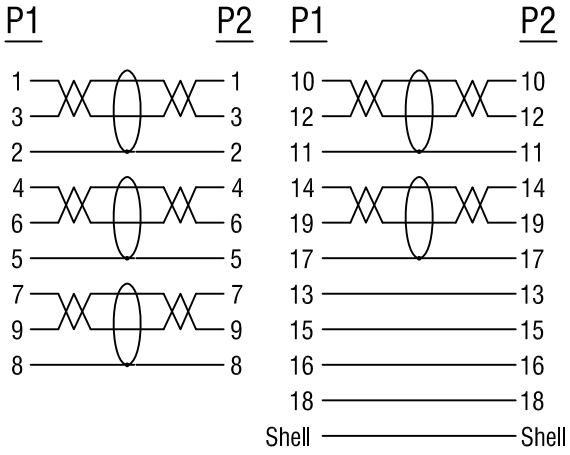

Electrical Test:
1.100% TEST OPEN SHORT MIS-WIRE.
2.CONTACT RESISTANCE:3Ω MAX.
3.INSULATION RESISTANCE:5MΩ MIN.
4.HI-POT:300V DC/10MS.
5.Real Test Passed 3840*2160P 30Hz.
6.Real Test Not Twinkling,Double Vision and Decolor.

NUMBER	PRODUCT SPECIFICATIONS	Quantity	Unit
C	85A TPE BLACK		G
B	HDMI 19P MALE(Black Insulator Shell Nickel Plated)	2	PCS
A	UL21445(30#*1P+DAM)*5+30#*4C+ADB OD:6.0mm, BLACK TPE JACKET (CABLE PRITING:High Speed HDMI™ Cable with Ethernet)	1	PCS

ROLINE GREEN HDMI High Speed Cable+Ethernet, A - A, M/M, 1m

Item	11.44.5731	
Draw	Kobe	Date: 2021.07.20
Approval		
Duty	F16	
Sample NO.		

SECOMP

Drawings of 1 (1) | Proportion: 1:1 | Unit(mm) | A4