Your Expert Partner for **Human Machine Interfaces**

Actuator

Distribution by
Rs-online

31-
801.002



https://rs-online.eao.com/component/31-801.00...

Your product:



31-801.002
Actuator

FRONT

Front dimension:	24 mm x 18 mm
Front form:	Rectangular
Front bezel colour:	Black
Front bezel material:	Plastic

MOUNTING

Design:	Raised
Mounting cut-out:	Ø 16 mm
Mounting type:	Panel mounting

ELECTRICAL CHARACTERISTICS

Switching voltage and switching current:	Typ. 10 VDC ... 26 VDC, ≤ 20mA
Operating voltage:	10 - 26 V DC

MECHANICAL CHARACTERISTICS

Terminal:	Plug-in terminal, 2.8 x 0.5 mm
Tightening torque:	Fixing nut max. 0.5 Nm
Weight:	0.009 kg

ACOUSTICAL CHARACTERISTICS

Tone frequency:	ca. 2.0 kHz
Sound pressure:	88dB (A) ±8dB at a distance of 0.1m

AMBIENT CONDITION

IP Protection:	IP40
Operating temperature:	– 25 °C ... + 55 °C
Storage temperature:	– 40 °C ... + 85 °C

CERTIFICATE

Approbations:	DNV
Conformities:	CE, UKCA, 2011 / 65 / EC (RoHS), 2014 / 35 / EU (LVD)
REACH:	REACH compliant
RoHS:	RoHS compliant

OTHER

Short Description:	Actuator, Ø 16 mm, 24 mm x 18 mm, Rectangular, Black, Plastic, Plug-in terminal, 2.8 x 0.5 mm
Housing colour:	Black
Housing material:	Plastic
Product attributes:	Further information see Technical data
Buzzer system:	Electronic non-contacting buzzer with IC oscillator
Wiring diagrams:	



A = Continuous tone
B = Interval tone 2Hz

Mounting cut-outs:

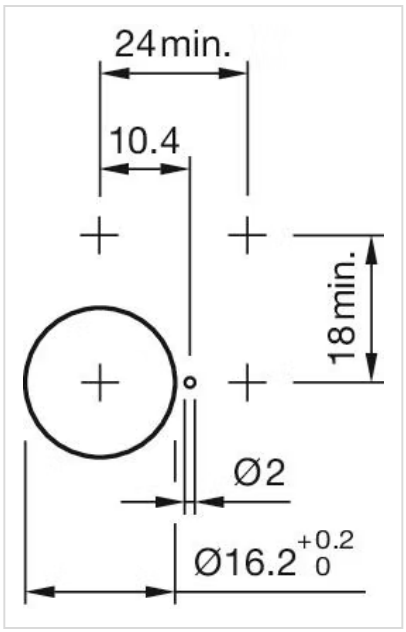

Dimension drawings:

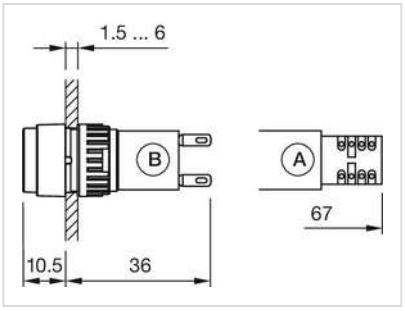

A = Solder terminal
B = Plug-in terminal 2.8 mm x 0.5 mm