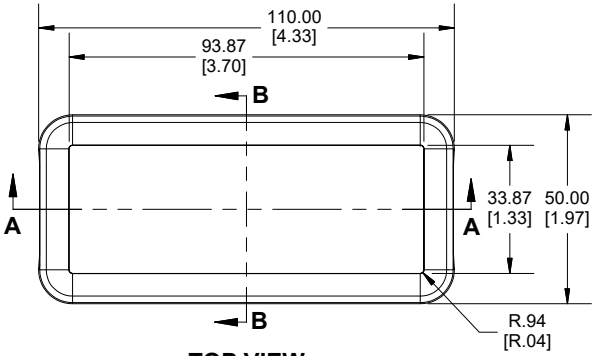

TOP VIEW

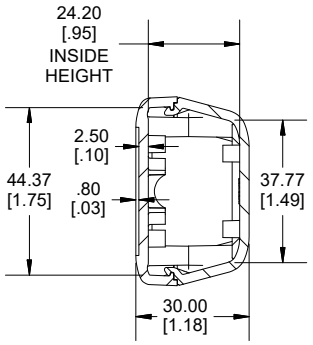

SECTION B-B
END VIEW

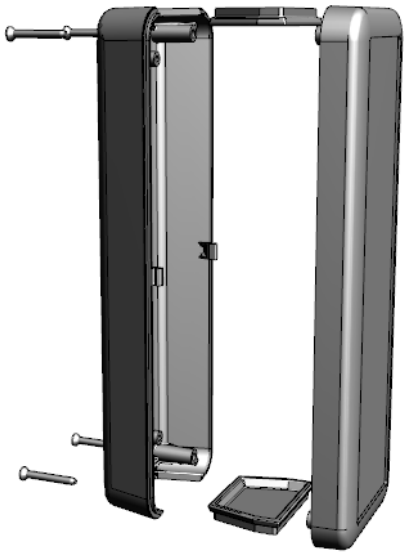

Enclosures can be Factory Modified (Milling, Drilling, Printing etc.)
Contact Factory (modshop@hammfg.com) for quotes
Solid models of this enclosure available in .stp or .x_t
(Part number and text placement/orientation on our products are subject to change, we do not recommend using them as a locating reference for modification purposes)

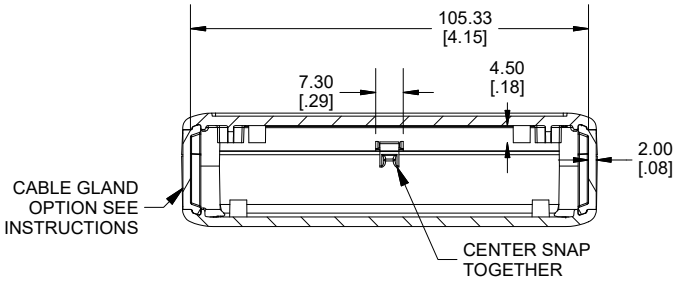

SECTION A-A
SIDE VIEW

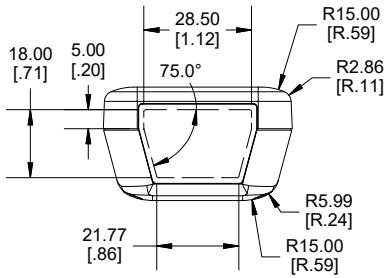

USEABLE PANEL AREA

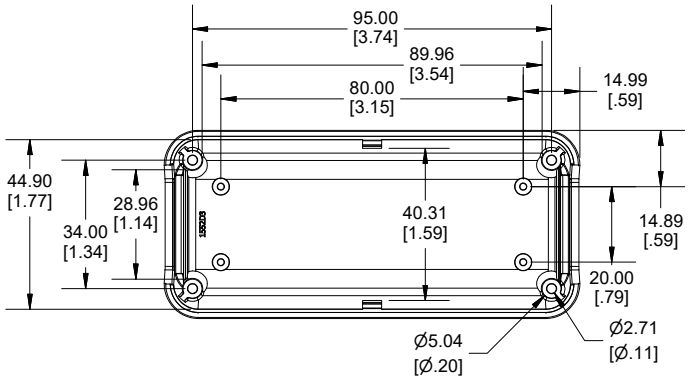

INSIDE BOTTOM

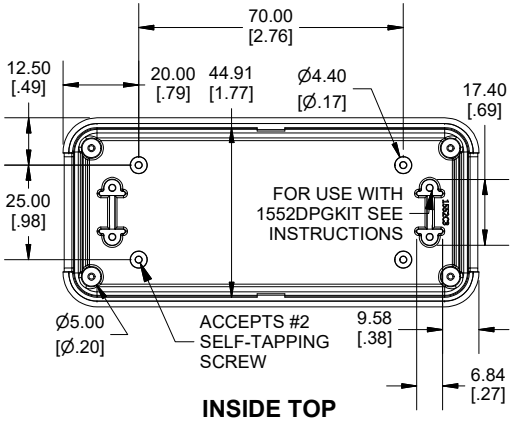

INSIDE TOP

MAXIMUM PCB LAYOUT
DRAWINGS ARE AVAILABLE

Dimensions:
mm
[inches]

NOTE
Purchased assembly includes box, lid, 2 Panels and 4 cover screws Molded from FR ABS (UL94-V0) plastic
Recommended Cover screw torque -- 21-28 ozf-in (15-20 cN-m)

1552	
1552D Regular Enclosure	
Fire Retardant ABS Grey	1552D3GY
Fire Retardant ABS Black	1552D3BK
ACCESSORIES	
1552D End Panel (Pkg 10)	1552DPLGY-10 (Grey)
	1552DPLBK-10 (Black)
1552D cover screw [#2 X 3/4" Self-Tap] (Pkg 50)	SC551-50 (Grey)
	SC551BK-50 (Black)
1552D Cable gland Kit [1 Cable Gland, 1 Tie Down, 2 Tie down screws]	1552DPGKITGY (Grey)
	1552DPGKITBK (Black)
1552 Wall Mount Holder	1552DHGY (Grey)
	1552DHBK (Black)
Tie Down Screw [#2 X 1/4" Self-Tap] (Pkg 50)	SC508-50
P.C. Board Plastite Self Tapping Screw [#2 x 3/16" Self-Tap] (PKG 100)	1553WTS100

HAMMOND MANUFACTURING®

1552D3

www.hammondmfg.com

REV: 15.10.2019