Cut-Out 82,5 x 63,5 R=2.25

Panel thickness = 2 mm

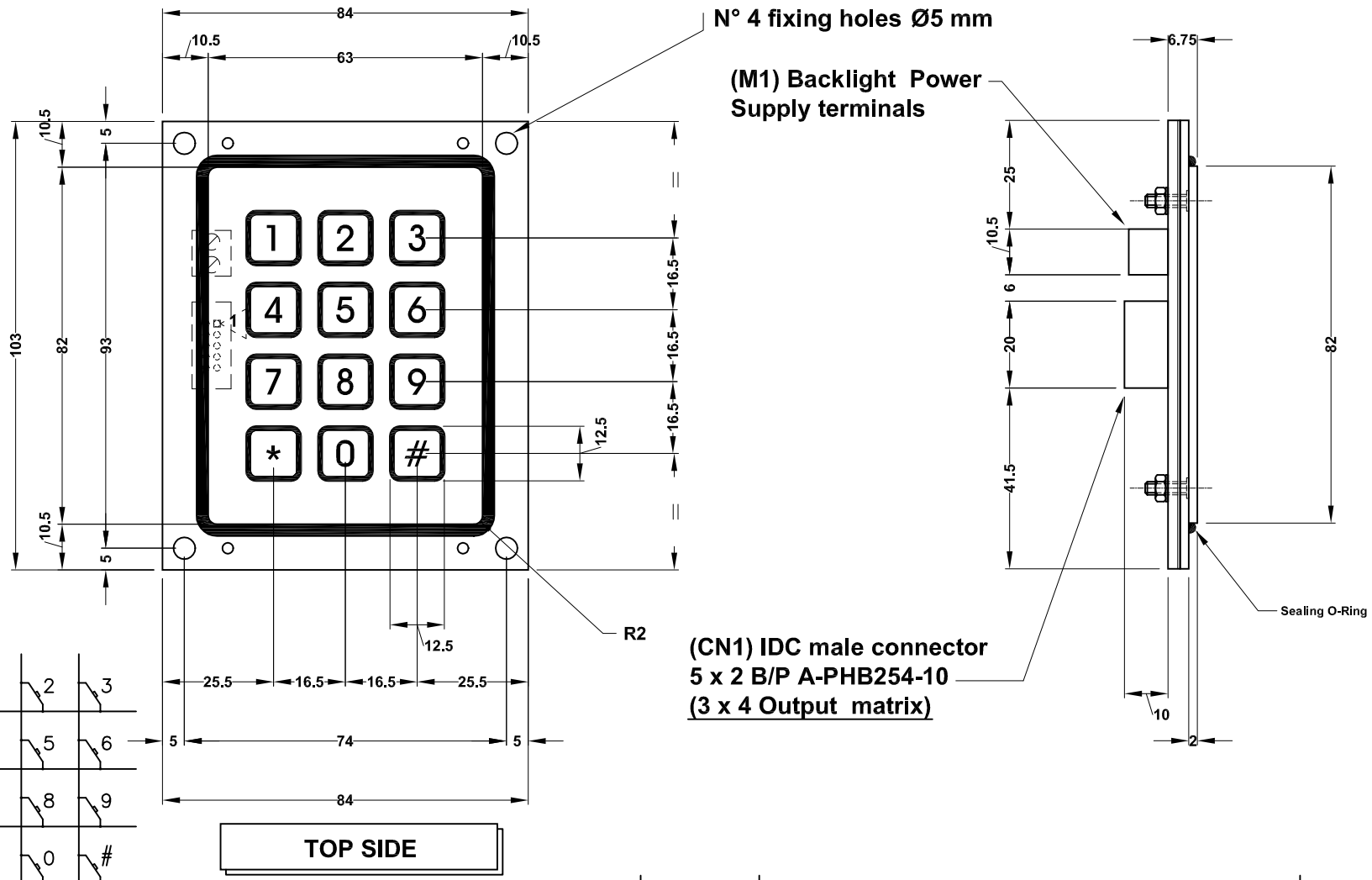

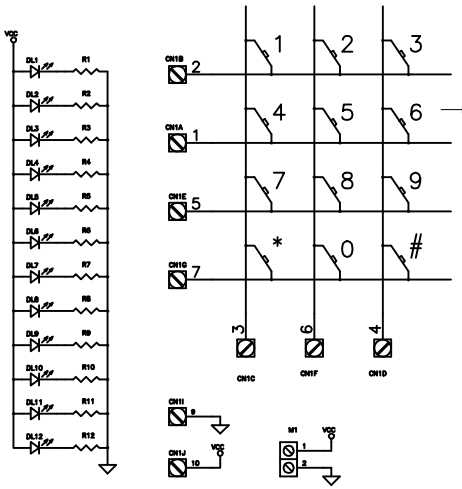

Rev.	DATE	Signature	Description of modifications	Approved
1	XXXXXXX	//////////	1 //////////////////////////	

THIS DRAW IS A RESERVED PROPERTY OF APEM ITALIA S.r.l.

ALL DIMENSIONS IN mm UNLESS OTHERWISE STATED – DO NOT SCALE DRAWING –

TOLERANCES UNLESS OTHERWISE STATED: LINEAR ±0.1 mm ANGULAR ±30'

REPRODUCTION FORBIDDEN	DATA	SIGNATURE	DESCRIPTION
DRAWN	14/04/2004	P. Mollo	**T12PQRL New Yellow Backlight Mechanical drawing**
CHECKED		xxxxx	
APPROVED		xxxxx	

APEM ITALIA S.r.l.
via G. Marconi 147/G
12030 MARENE (CN) – ITALIA
Tel. +39.0172.743170
Fax. +39.0172.743171
apem.italia@apem.it
www.apem.it

APEM ITALIA

PART. N. 59800021

59800021_T12PQRL_new .DWG

SCALE		REV.
1 : 1		0
SHEET	INDEX REF.	OF
1 / 1		