

19 Swell Action Latch

Plastic · Light-duty

- **Accommodates misalignment**
- **Vibration dampening**

Material and Finish

Nylon and glass-filled nylon black with SBR rubber bushing

Performance Details

Frame thickness	Rated load (short term)
1.5 (.059)	400 N (90lbf)
2.5 (.098)	690 N (155lbf)
3.2 (.125)	620 N (140lbf)
4.8 (.190)	190 N (43lbf)

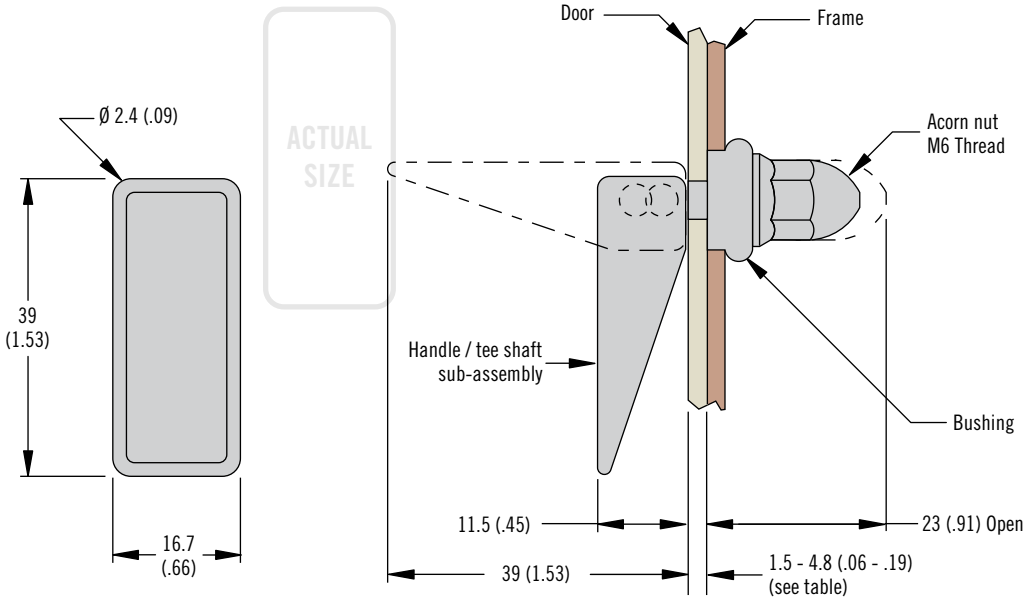

Door Thickness	Use Washer?	Adjustment Required
1.7±0.2 (.07±.01)	Yes	No
1.9 - 2.3 (.08 - .09)	Yes	Yes
2.5±0.2 (.10±.01)	No	No
2.7 - 4.8 (.11 - .19)	No	Yes

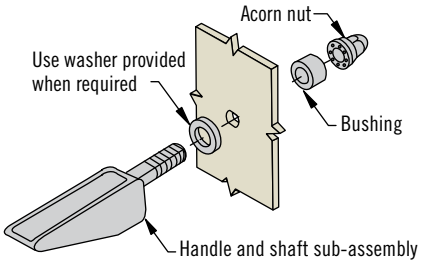

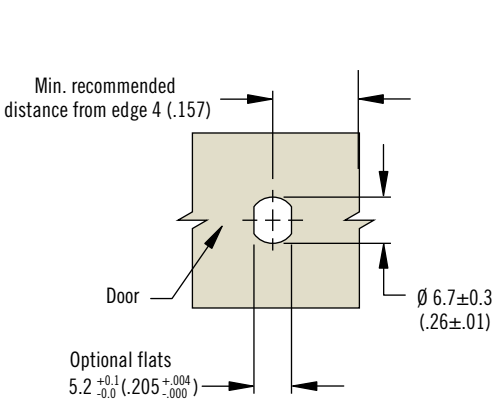

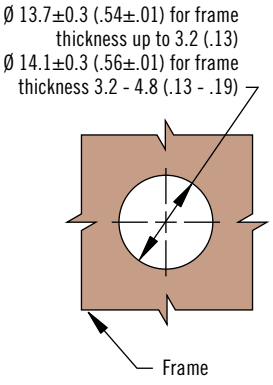

Part Number

See table

Part Number	Packaging
19-51-01	Components bulk packaged
19-54-01	1 Assembly per bag

19 Swell Action Latch

Zinc · Heavy-duty



- **Accommodates misalignment**
- **Vibration dampening**

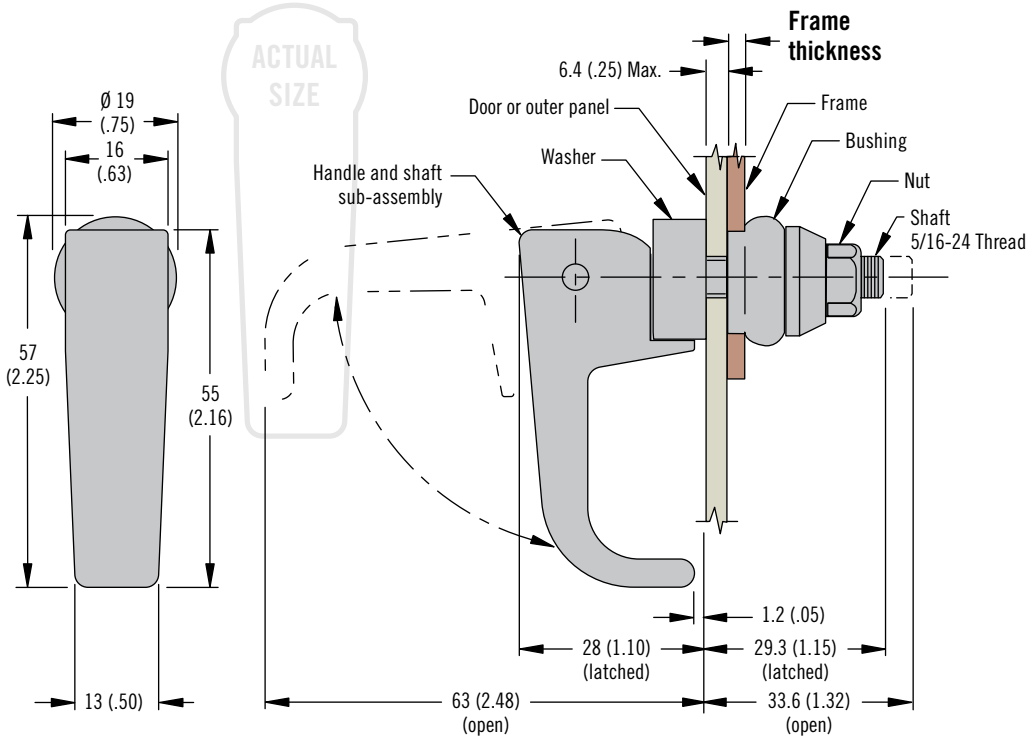

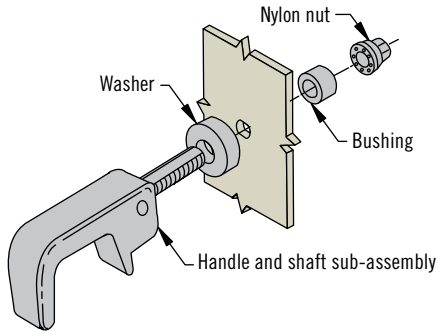

Frame Thickness	Ø K +0.5 (.031) -0.0 (.000)
1.2 - 3.2 (.05 - .13)	19 (.750)
3.2 - 4.8 (.13 - .19)	19.5 (.766)
4.8 - 6.4 (.19 - .25)	20 (.781)
6.4 (.25) and up	20.5 (.797)

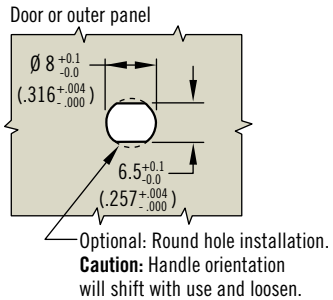

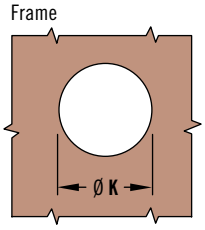

Part Number
19-14-10

Material and Finish

Zinc alloy, black powder coated, acetal and SBR rubber bushing

Performance Details

Frame thickness	Rated load (short term)
1.2 (.05) to 3.2 (.13)	330 N (75 lbf)
3.2 (.13) to 4.8 (.19)	660 N (150 lbf)
4.8 (.19) to 6.4 (.25)	550 N (125 lbf)
6.4 (.25) and Up	220 N (50 lbf)

Installation Notes

Max. tightening torque on mounting nut: 1.0 N·m (9i n·lbf)

Part Number

See table

Dimensions in millimeters (inch) unless otherwise stated



19 Swell Action Latch

Plastic · Flush

- **Flush low profile design**
- **Accommodates misalignment**
- **Vibration resistant**

Material and Finish

Nylon black with stainless steel mounting bracket and SBR rubber bushing

Set tool: 1095 Steel, zinc plated

Performance Details

Series	Frame thickness	Rated load (short term)
19-83-10	0.5 - 3.2 (.016 - .13)	180 N (40lbf)
19-93-10	0.5 - 3.2 (.016 - .13)	440 N (100lbf)
	3.2 - 4.8 (.125 - .19)	330 N (75lbf)

Installation notes

Position bracket and retainer over stud and strike set tool. Adjust mounting nut to set latching tension.

Set tool

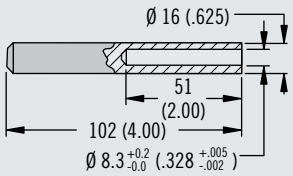

Tool part number: 17-10019-11

Part Number

See table

19-83-10

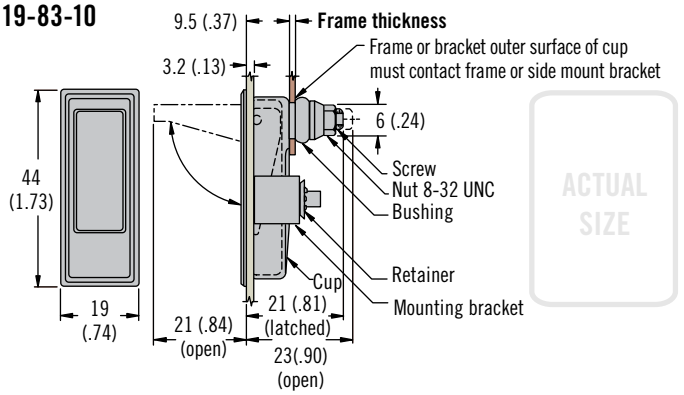

ACTUAL SIZE

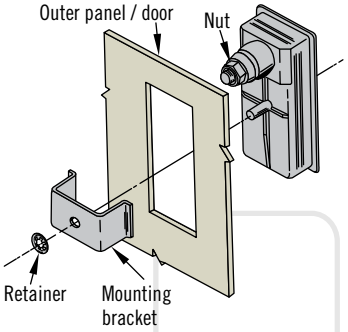

ACTUAL SIZE

19-93-10

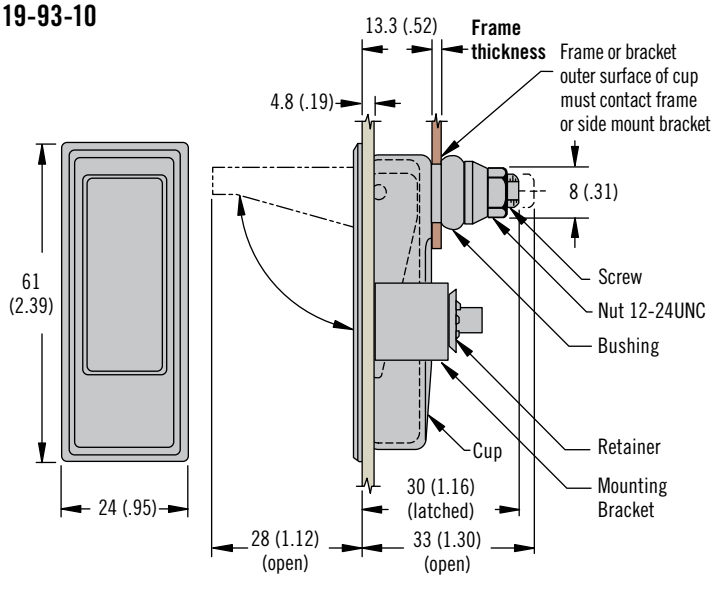

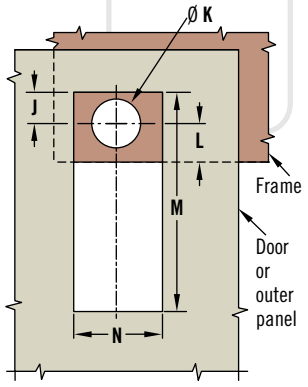

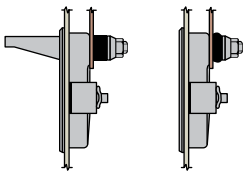

Part Number	Max. Misalignment Between Centerlines of Panel Hole and Frame Hole	Frame or Bracket					Outer Panel / Door	
		Rated Load (Short Term)	Frame Thickness	J±0.3 (.010)	Ø K +0.5 (.020) -0.0 (.000)	L Max.	M	N
19-83-10	0.4 (.015)	180 N (40lbf)	3.2 (.13) Max.	6 (.234)	9.5 (.375)	11 (.45)	41.5 +0.4 -0.0 (1.64 +.005 -.0)	16.5 +0 -0.4 (.640 +0 -.005)
19-93-10	0.6 (.025)	440 N (100lbf)	Up to 3.2 (.13)	8 (.312)	13.5 (.531)	15.(.56)	57.5±.02 (2.265±.005)	20.5 +0.4 -0.0 (.812 +0 -.005)
	0.8 (.030)	330 N (75lbf)	3.2 - 4.8 (.13 - .19)		14 (.56)			

Dimensions in millimeters (inch) unless otherwise stated

19 Swell Action Latch

Plastic Light-duty



19-81-10

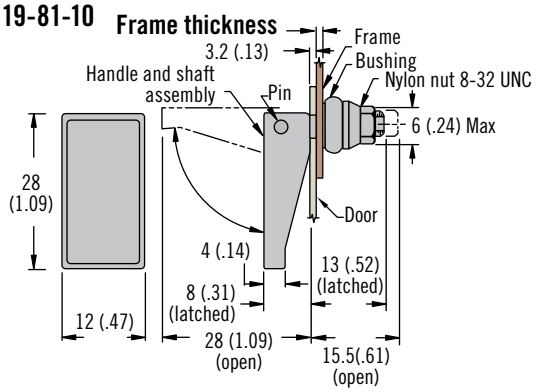

ACTUAL SIZE

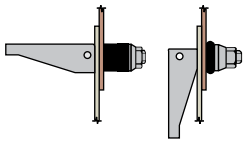

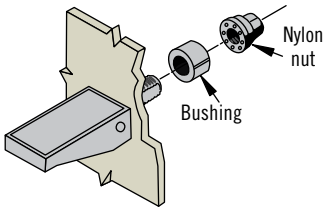

19-91-10

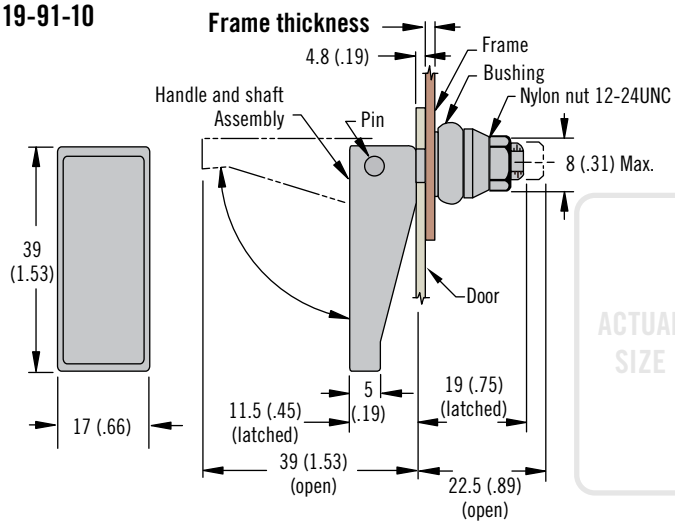

ACTUAL SIZE

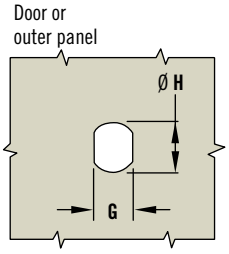

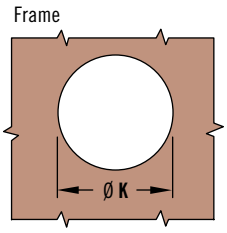

Part Number	G +0.1 (+.004) -0.0 (-.000)	H +0.1 (+.004) -0.0 (-.000)	Frame Thickness	K +0.5 (+.030) -0.0 (-.000)
19-81-10	3.3 (.130)	4.1 (.161)	3.2 (.13) Max.	9.5 (.375)
19-91-10	4.5 (.177)	5.8 (.228)	Up to 3.2 (.13)	13.5 (.531)
			3.2 - 4.8 (.13 - .19)	14 (.547)

Accessories - Side mount bracket

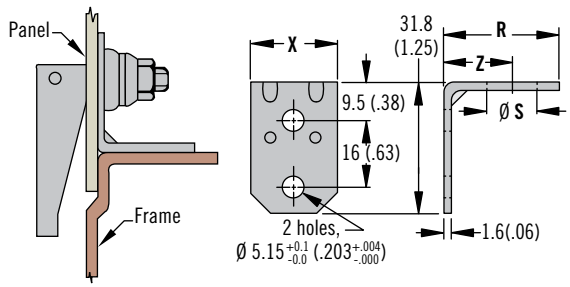

Latch Part Number	Ø S	R	X	Z	Bracket Part Number
19-81-10 and 19-83-10	9.5 (.38)	27 (1.06)	20.5 (.81)	16.7 (.66)	19-0-15666-11
19-91-10 and 19-93-10	13.5 (.53)				19-0-15665-11

- **Accommodates misalignment**
- **Vibration dampening**

Material and Finish

Nylon and glass-filled nylon black with SBR rubber bushing

Performance Details

Series	Frame thickness	Rated load (short term)
19-81-10	0.5 - 3.2 (.016 - .13)	180 N (40lbf)
19-91-10	0.5 - 3.2 (.016 - .13)	440 N (100lbf)
	3.2 - 4.8 (.125 - .19)	330 N (75lbf)

Installation notes

Max. tightening torque on mounting nut: 1 N•m (9 in•lbf)

Part Number

See table

Southco® Quarter-turn Fasteners

Swell Action Series

- **No receptacle required**
- **Vibration-resistant**
- **Two sizes, two head styles**
- **Use in nearly any material and in blind applications**



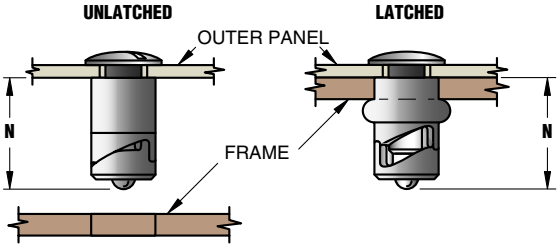

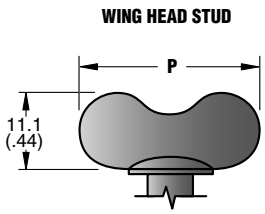

NOTE: Swell latches hold panels snug under short term intermittent loading. Do not apply continuous load.

YOUR OUTER PANEL THICKNESS MIN.	YOUR OUTER PANEL THICKNESS MAX.	F REF.	ASSEMBLY PART NUMBERS L	With Oval Head Stud	With Wing Head Stud
SERIES 20					
1.3 (.050)	1.8 (.069)	17.5 (.69)	13.6 (.535)	84-20-**060**-10 ●	84-20-**060**-20 ●
1.8 (.070)	2.3 (.089)	18 (.71)	14.1 (.555)	84-20-**080**-10 ●	84-20-**080**-20
2.3 (.090)	2.8 (.109)	18.5 (.73)	14.6 (.575)	84-20-**100**-10 ●	84-20-**100**-20
2.8 (.110)	3.3 (.129)	19.1 (.75)	15.1 (.595)	84-20-**120**-10 ●	84-20-**120**-20
SERIES 50					
1.3 (.050)	1.8 (.069)	21.3 (.84)	16.6 (.654)	84-50-**060**-10 ●	84-50-**060**-20 ●
1.8 (.070)	2.3 (.089)	21.8 (.86)	17.1 (.674)	84-50-**080**-10 ●	84-50-**080**-20 ●

SERIES	DIMENSIONS A	B	C	D	E	G	H	J	K	M	N	O	P
20	9.5 (.38)	2.3 (.09)	6.4 (.25)	11.1 (.44)	12.7 (.50)	11.9 (.47)	17.5 (.69)	152.4 (6.00)	11.1 (.44)	33.3 (1.31)	15.9 (.63)	9.7 (.39)	22.2 (.88)
50	14.3 (.56)	3.0 (.12)	7.9 (.31)	13.5 (.53)	15.9 (.63)	14.3 (.56)	20.6 (.813)	139.7 (5.50)	14.3 (.56)	30.2 (1.19)	19.8 (.78)	14.6 (.58)	28.6 (1.13)

Material and Finish

WING: 1010 Steel, zinc plate, chromate plus sealer. SLOTTED HEAD STUDS: 1008 Steel, zinc plate, chromate plus sealer. SLEEVE: SBR Rubber. STATIONARY CAM: Acetal, black. MOVING CAM: Die-cast zinc, black organic coating.

Studs are bulk packaged.
Sleeves and cams are packaged one set per bag.

Product Strength Guidelines

(To assist in your product selection; samples are available for your evaluation.)

SERIES 20: Maximum static load 180 N (40 lbs.)
Average ultimate load 330 N (75 lbs.)
SERIES 50: Maximum static load 220 N (50 lbs.)
Average ultimate load 440 N (100 lbs.)
Flammability Rating: UL94-HB
Operating Temperature Rating: 0ºC (30ºF) to 65ºC (150ºF)

Assembly

NOTE: On hinged doors, minimum mounting distance from C hinge to C fastener = 152.4 (6).

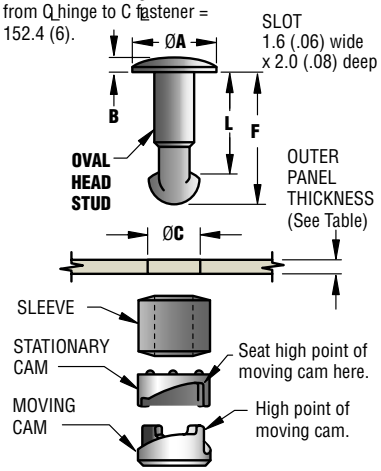

A. When frame thickness is 3.2 (.125) or less:

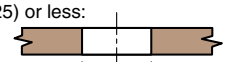

B. When frame thickness is 3.2 (.125) or more:

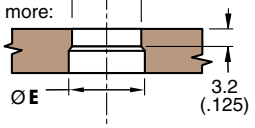

C. For blind hole applications:

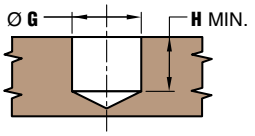

millimeter (inch)
millimeter
(inch)
Dimensions without tolerances are for reference only.

Side Mount Bracket

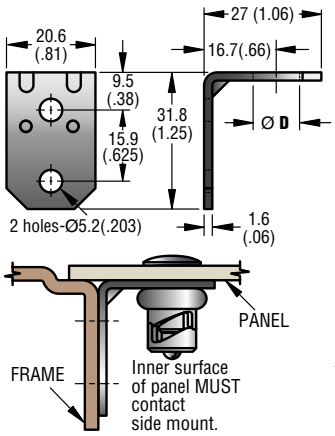

Bracket Material and Finish
Steel, zinc plated, yellow chromate dip.

Installation Tool

(Order separately by part number)

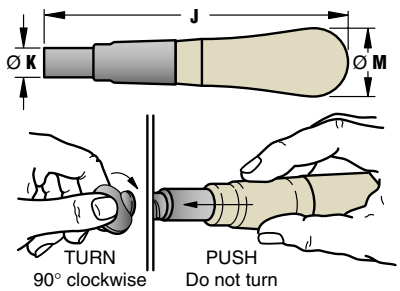

BRACKET PART NUMBERS SERIES 20	SERIES 50
84-0-15742-11●	19-0-15665-11●

TOOL PART NUMBERS SERIES 20	SERIES 50
82-0-14719-11●	41-0-12125-11●

 ● Products identified with this symbol are stocked subject to prior sale in one or more of our global locations. If unavailable from our facility nearest you, allow for shipping time from another facility. southco