# FIX EXPANSION PLUG WITH SCREW

**Easy-to-install plug with screw giving exceptional performance in solid base materials**







## Product information

### Features and benefits

- Anti-rotation fins prevent spinning during tightening of the screw.
- Engineered grip feature for extra holding power.
- Two-way expansion mechanism provides a strong anchorage in solid base materials.

### Applications

- Pictures
- Lighting
- Skirting / Dado railing
- Shelves
- Trunking
- Cable trays
- Electrical fittings
- Letterboxes

### Base materials

**Approved for use in:**

- Concrete
- Solid Brick
- Solid Sand-lime Brick
- Aerated Concrete Block

## Installation guide

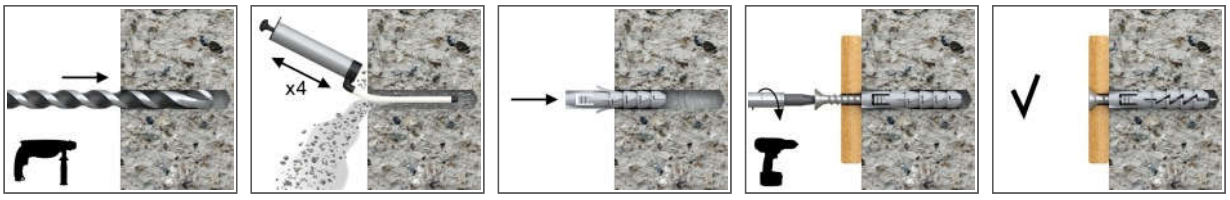


1. Drill a hole of required diameter.
2. Insert FIX plug into the hole and tap home.
3. Insert screw of required diameter into plug through fixture and tighten.

## Product information

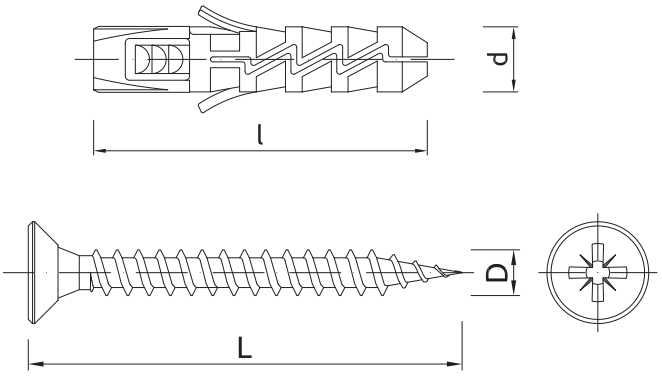


Product dimensions

| Size | Product Code | Plug | | Screw | | Fixture | |
|---|---|---|---|---|---|---|---|
| | | Diameter | Length | Diameter | Length | Max. thickness | Hole diameter |
| | | d | l | D | L | $t_{fix}$ | $d_f$ |
| | | [mm] | | | | | |
| Ø5 | R-FIX-05+ | 5 | 25 | 3,5 | 30 | 5 | 4 |
| Ø6 | R-FIX-06+ | 6 | 30 | 3,5 | 30 | 1 | 4 |
| | R-FIX-06+340 | 6 | 30 | 3,5 | 40 | 10 | 4 |
| | R-FIX-06+350 | 6 | 30 | 3,5 | 50 | 20 | 4 |
| | R-FIX-06+435 | 6 | 30 | 4 | 35 | 5 | 5 |
| | R-FIX-06+440 | 6 | 30 | 4 | 40 | 10 | 5 |
| | R-FIX-06+450 | 6 | 30 | 4 | 50 | 20 | 5 |
| Ø8 | R-FIX-08+ | 8 | 40 | 5 | 45 | 5 | 6 |
| | R-FIX-08+450 | 8 | 40 | 4,5 | 50 | 10 | 5 |
| | R-FIX-08+460 | 8 | 40 | 4,5 | 60 | 20 | 5 |
| | R-FIX-08+550 | 8 | 40 | 5 | 50 | 10 | 6 |
| | R-FIX-08+560 | 8 | 40 | 5 | 60 | 20 | 6 |
| | R-FIX-08+580 | 8 | 40 | 5 | 80 | 40 | 6 |
| | R-FIX-08+100 | 8 | 40 | 5 | 100 | 60 | 6 |
| Ø10 | R-FIX-10+560 | 10 | 50 | 5 | 60 | 10 | 6 |
| | R-FIX-10+660 | 10 | 50 | 6 | 60 | 10 | 7 |
| | R-FIX-10+680 | 10 | 50 | 6 | 80 | 30 | 7 |
| | R-FIX-10+100 | 10 | 50 | 6 | 100 | 50 | 7 |
| | R-FIX-10+120 | 10 | 50 | 6 | 120 | 70 | 7 |
| | R-FIX-10+160 | 10 | 50 | 6 | 160 | 110 | 7 |
| Ø12 | R-FIX-12+680 | 12 | 60 | 6 | 80 | 20 | 7 |
| | R-FIX-12+100 | 12 | 60 | 6 | 100 | 40 | 7 |
| | R-FIX-12+120 | 12 | 60 | 6 | 120 | 60 | 7 |

## Installation data

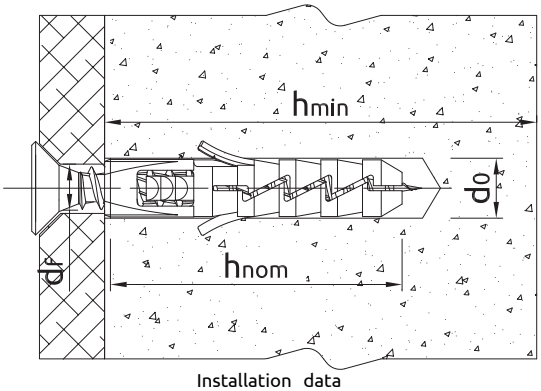


Installation data

| Size | | | Ø5 | Ø6 | Ø8 | Ø10 | Ø12 |
|---|---|---|---|---|---|---|---|
| Fixing diameter | d | [mm] | 5 | 6 | 8 | 10 | 12 |
| Hole diameter in substrate | $d_0$ | [mm] | 5 | 6 | 8 | 10 | 12 |
| Min. hole depth in substrate | $h_0$ | [mm] | 35 | 40 | 50 | 60 | 70 |
| Min. installation depth | $h_{nom}$ | [mm] | 25 | 30 | 40 | 50 | 60 |
| Min. substrate thickness | $h_{min}$ | [mm] | 55 | 60 | 70 | 80 | 90 |
| Min. spacing | $s_{min}$ | [mm] | 25 | 30 | 40 | 30 | 30 |
| Min. edge distance | $c_{min}$ | [mm] | 25 | 30 | 40 | 40 | 40 |

## Basic performance data

Performance data for single fixing without influence of edge distance and spacing

| Substrate | | Concrete C20/25 - C50/60 | Solid clay brick min 20MPa (eg Mz20/2.0) | Sand-lime solid brick | Aerated concrete 600 Mark V |
|---|---|---|---|---|---|
| **MEAN ULTIMATE LOAD $F_{Ru,m}$** | | | | | |
| Ø5, Embedment depth 25mm | [kN] | 0.26 | 0.32 | 0.22 | 0.30 |
| Ø6, Embedment depth 30mm | [kN] | 0.24 | 1.11 | 0.65 | 0.76 |
| Ø8, Embedment depth 40mm | [kN] | 1.02 | 2.92 | 1.65 | 1.17 |
| Ø10, Embedment depth 50mm | [kN] | 0.78 | 1.86 | 1.62 | 1.64 |
| Ø12, Embedment depth 60mm | [kN] | 1.82 | 5.80 | 4.06 | 2.99 |
| **CHARACTERISTIC LOAD $F_{Rk}$** | | | | | |
| Ø5, Embedment depth 25mm | [kN] | 0.10 | 0.15 | 0.10 | 0.15 |
| Ø6, Embedment depth 30mm | [kN] | 0.15 | 0.40 | 0.30 | 0.40 |
| Ø8, Embedment depth 40mm | [kN] | 0.50 | 2.00 | 1.20 | 0.75 |
| Ø10, Embedment depth 50mm | [kN] | 0.40 | 0.90 | 0.60 | 0.90 |
| Ø12, Embedment depth 60mm | [kN] | 1.20 | 4.00 | 3.00 | 2.00 |
| **DESIGN LOAD $F_{Rd}$** | | | | | |
| Ø5, Embedment depth 25mm | [kN] | 0.05 | 0.06 | 0.04 | 0.07 |
| Ø6, Embedment depth 30mm | [kN] | 0.08 | 0.16 | 0.12 | 0.20 |
| Ø8, Embedment depth 40mm | [kN] | 0.27 | 0.80 | 0.48 | 0.37 |
| Ø10, Embedment depth 50mm | [kN] | 0.22 | 0.36 | 0.24 | 0.45 |
| Ø12, Embedment depth 60mm | [kN] | 0.66 | 1.60 | 1.20 | 1.00 |
| **RECOMMENDED LOAD $F_{rec}$** | | | | | |
| Ø5, Embedment depth 25mm | [kN] | 0.04 | 0.04 | 0.03 | 0.05 |
| Ø6, Embedment depth 30mm | [kN] | 0.06 | 0.11 | 0.09 | 0.14 |
| Ø8, Embedment depth 40mm | [kN] | 0.19 | 0.57 | 0.34 | 0.26 |
| Ø10, Embedment depth 50mm | [kN] | 0.16 | 0.26 | 0.17 | 0.32 |
| Ø12, Embedment depth 60mm | [kN] | 0.47 | 1.14 | 0.86 | 0.71 |

## Product commercial data

| Product Code | Plug | Screw | Quantity [pcs] | | | Weight [kg] | | | Bar Codes |
|---|---|---|---|---|---|---|---|---|---|
| | Diameter [mm] | Length [mm] | Box | Outer | Pallet | Box | Outer | Pallet | |
| R-FIX-05+ | 5 | 30 | 200 | 6400 | 153600 | 0.37 | 11.8 | 314.2 | 5906675168142 |
| R-FIX-06+ | 6 | 30 | 200 | 6400 | 153600 | 0.37 | 11.8 | 314.2 | 5906675135540 |
| R-FIX-06+340 | 6 | 40 | 200 | 6400 | 153600 | 0.78 | 25.0 | 629.0 | 5906675168166 |
| R-FIX-06+350 | 6 | 50 | 200 | 6400 | 153600 | 0.51 | 16.3 | 421.7 | 5906675135571 |
| R-FIX-06+435 | 6 | 35 | 200 | 4800 | 115200 | 0.55 | 13.2 | 346.8 | 5906675135588 |
| R-FIX-06+440 | 6 | 40 | 200 | 4800 | 115200 | 0.58 | 13.9 | 364.1 | 5906675135595 |
| R-FIX-06+450 | 6 | 50 | 200 | 3200 | 76800 | 0.63 | 10.1 | 271.9 | 5906675135601 |
| R-FIX-08+ | 8 | 45 | 200 | 2400 | 86400 | 0.66 | 7.9 | 315.1 | 5906675168227 |
| R-FIX-08+450 | 8 | 50 | 200 | 2400 | 57600 | 0.90 | 10.8 | 289.2 | 5906675135618 |
| R-FIX-08+460 | 8 | 60 | 200 | 2400 | 57600 | 1.04 | 12.5 | 329.5 | 5906675135694 |
| R-FIX-08+550 | 8 | 50 | 200 | 2400 | 57600 | 1.34 | 16.1 | 415.9 | 5906675135717 |
| R-FIX-08+560 | 8 | 60 | 100 | 1200 | 28800 | 0.69 | 8.3 | 228.7 | 5906675135748 |
| R-FIX-08+580 | 8 | 80 | 100 | 1600 | 38400 | 0.77 | 12.3 | 325.7 | 5906675135755 |
| R-FIX-08+100 | 8 | 100 | 100 | 1600 | 38400 | 0.92 | 14.7 | 383.3 | 5906675135762 |
| R-FIX-10+560 | 10 | 60 | 100 | 1200 | 43200 | 0.74 | 8.9 | 349.7 | 5906675168289 |
| R-FIX-10+660 | 10 | 60 | | | | | | | |
| R-FIX-10+680 | 10 | 80 | 50 | 800 | 19200 | 0.63 | 10.1 | 271.9 | 5906675090719 |
| R-FIX-10+100 | 10 | 100 | 50 | 600 | 14400 | 0.72 | 8.6 | 237.4 | 5906675133669 |
| R-FIX-10+120 | 10 | 120 | 50 | 600 | 14400 | 0.85 | 10.2 | 274.8 | 5906675133843 |
| R-FIX-10+160 | 10 | 160 | 50 | 600 | 14400 | 0.95 | 11.4 | 303.6 | 5906675133850 |
| R-FIX-12+680 | 12 | 80 | 50 | 600 | 14400 | 0.70 | 8.4 | 231.6 | 5906675133904 |
| R-FIX-12+100 | 12 | 100 | 50 | 600 | 14400 | 0.80 | 9.6 | 260.4 | 5906675133928 |
| R-FIX-12+120 | 12 | 120 | 50 | 600 | 14400 | 0.89 | 10.7 | 286.3 | 5906675133935 |