Thermistor Motor Protection Relay DHC

Operating Instructions

English translation

Errors and technical changes reserved

Correct Use

The motor protection relay DHC is a temperature control relay for electric motors with no-voltage protected reconnection-stop, e.g. in case of a mains failure the relay remains to be interlocked at a release.



Features

- Compact housing
- High security is given by the reconnection-stop and the principle of rest current
- Easy installation of several sensor resistances at one relay
- Maximum of reliability because of the modern CMOS-technology
- Integrated reset botton

Function

The DHC motor protection relay is a temperature monitoring relay for electro motors. It evaluates the resistance values of the PTC resistor integrated in the motor coil.

At a small sensor resistance (normal temperature) at T1-T2 the output contact 13-14 is closed. When the nominal cut-off temperature is reached, the contact 13-14 opens and interrupts the control circuit. Simultaneously, the interlocking of the output relay follows assured by the permanent memory; the red LED shines.

This interlocking could only be canceled after the temperature falls under the nominal cut-off temperature and the reset botton is pressed.

An interruption of the supply voltage will not lead to electrical reset. A reset and therewith a restart of the motor could only result of a cooled off motor winding and an actuation of the integrated reset botton at the front.

Because of the principle of rest current, also a wire breakage in the sensor line will be indicated as a fault.

Installation

According to EN 60204-1 the unit is designed to be used in control cabinets with a minimum environmental protection of IP54. The housing is designed to be mounted on a 35 mm DIN rail according to DIN EN 60715 TH35.

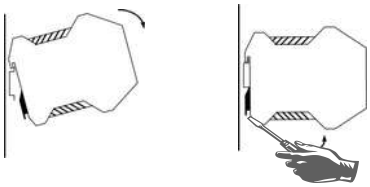

Fig. 1 Mounting / Demounting

Safety Precautions



- The installation and operation must be carried out by qualified personnel only,
  - who is familiar with the professional handling of machine equipment,
  - who is familiar with the valid rules of industrial safety and accident prevention,
  - who read and understood the operating instructions.
- The safe function of the device during machine operation cannot be guaranteed in case of wrong connection or improper operation. This may lead to fatal injuries.
- Pay attention to country specific regulations.
- The electrical installation must be performed after disconnecting the device and the machine from the mains supply.
- The wiring must be carried out according to the instructions of this operating manual.
- The person who programs the device must be protected against electrostatic discharge (ESD protection).
- Opening the device, any manipulation of the device and the avoidance of the safety facilities are not permitted.
- All relevant safety regulations and standards must be attended to.
- Non-observance of the safety regulations may cause death, severe injuries or substantial damage to property.
- Before use, please, read the operating instructions and keep it in a safe place. Make sure that the operating instructions are always available for installation, initial operation and maintenance.

Non-observance of the instructions above will cause the loss of warranty.

L05

E61-272-00

H. ZANDER GmbH & Co. KG • Am Gut Wolf 15 • 52070 Aachen • Germany
Tel +49 (0)241 9105010 • Fax +49 (0)241 91050138 • info@zander-aachen.de • www.zander-aachen.de

Electrical Connection

At the terminals T1-T2 the thermally controlled resistors (PTC), which are in the motor winding, are connected. Several temperature sensors can be connected in series; the cumulative cold resistance has to be smaller than 1.65 kΩ.

By the DHC with alternating voltage supply (standard type), the measuring circuit is galvanically isolated from the mains.

On application items with DC24 V-supply are possible; but for the galvanic isolation of the measuring line it is recommended to connect the DC24 V-type to an external transformer.

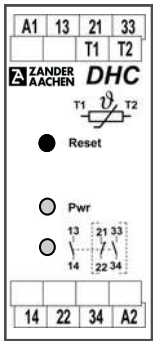

A1: *Power supply*
A2 : *Power supply*
T1: *PTC resistor input*
T2 : *PTC resistor input*
13-14: *Output contact 1*
only 446060:
21-22: *Output contact 2*
33-34: *Output contact 3*

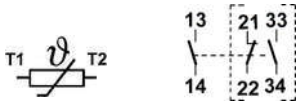

Fig. 2: Electrical Connection

Maintenance

The device must be checked once per month for proper function and for signs of tampering.

The device is otherwise maintenance free, provided that it was installed properly.

Techn. Data

Operating voltage U_N	AC24 V, AC230 V, 50-60 Hz
Voltage tolerance	+ 10 / - 15%
Power consumption	approx. 0.5 VA
LED´s	stand by (green) overtemperature relay contact (red)
Protection	IP20
Operating range T1-T2	1.65 - 4.0 kOhm
Terminal voltage resistor-input	< 6 V
Reset/acknowledgement	Button at front
Switching capacity	1 NO (Order-No. 446052) 2 NO/1 NC (Order-No. 446060) AC250 V: max. 5 A, max. 1250 VA DC: 2 A at 24 VDC
Contact life	mechanical 5x10^7 operations
Contact fuses	3 A
Max. line cross section	2.5 mm^2
Test voltage	2.5 kV (control voltage/contacts)
Rated impulse withstand voltage	4 kV (DIN VDE 0110-1)
Rated insulation voltage	250 V
Temperature range	-20°C - +60°C
Weight	approx. 200 g
Installation position	any

Dimensions

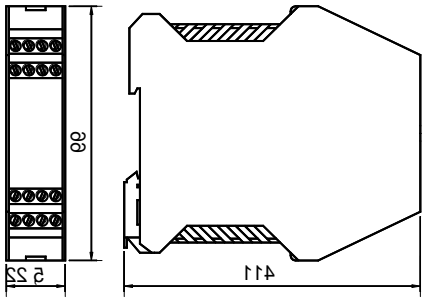

CE

Variants

Order-No. 446052	DHC AC24 V, 1 NO contact
Order-No. 446060	DHC AC230 V, 2 NO / 1 NC *)

*) discontinued model

L05

E61-272-00

CE Konformitätserklärung
EC Declaration of Conformity

Hersteller: H. ZANDER GmbH & Co. KG
Producer: Am Gut Wolf 15 • 52070 Aachen • Deutschland

Produktgruppe: Motorschutzrelais
Product Group: Motor Protection Relais

Produkt Name
Product Name

DHC

Die Produkte stimmen mit den Vorschriften folgender Europäischer Richtlinien überein:
The products conform with the essential protection requirements of the following European directives:

2014/35/EU : Niederspannungsrichtlinie
2014/35/EU : Low-voltage directive

2011/65/EU : RoHS Richtlinie
2011/65/EU : RoHS directive

2014/30/EU : EMV Richtlinie
2014/30/EU : EMC directive

Die Übereinstimmung der bezeichneten Produkte mit den Vorschriften der o.a. Richtlinie wird, falls anwendbar, nachgewiesen durch die vollständige Einhaltung folgender Normen:
If applicable, the conformity of the designated products is proved by full compliance with the following standards:

EN 61439-1:2011
EN 60947-5-1:2017
IEC 63000:2018
EN 60664-1:2007
EN 61000-6-2:2005
EN 60947-1:2007 + A1:2011 + A2:2014
EN 61000-6-3:2007 + A1:2011

Dokumentationsbeauftragte/-r: Christiane Nittschalk
Documentation manager

Aachen, den 14.05.2019

Dr.-Ing. Marco Zander
Geschäftsleitung
General Manager

Dipl.-Ing. Alfons Austerhoff
Leiter CE-Konformitätsbewertung
Manager for EC declaration of conformity

F7.3-07/03

L05
E61-272-00