203685
LHT 81 M 400 G4L-IBS
Laser diffuse sensor with background suppression

- Mechanical background suppression
- Vibration-safe 6-turn adjustment for finest adjustment
- Red-light laser, with small laser spot
- Push-pull pnp + npn
- High resolution, switching accuracy, switching frequency
- Functional reserve indicator
- Robust metal housing



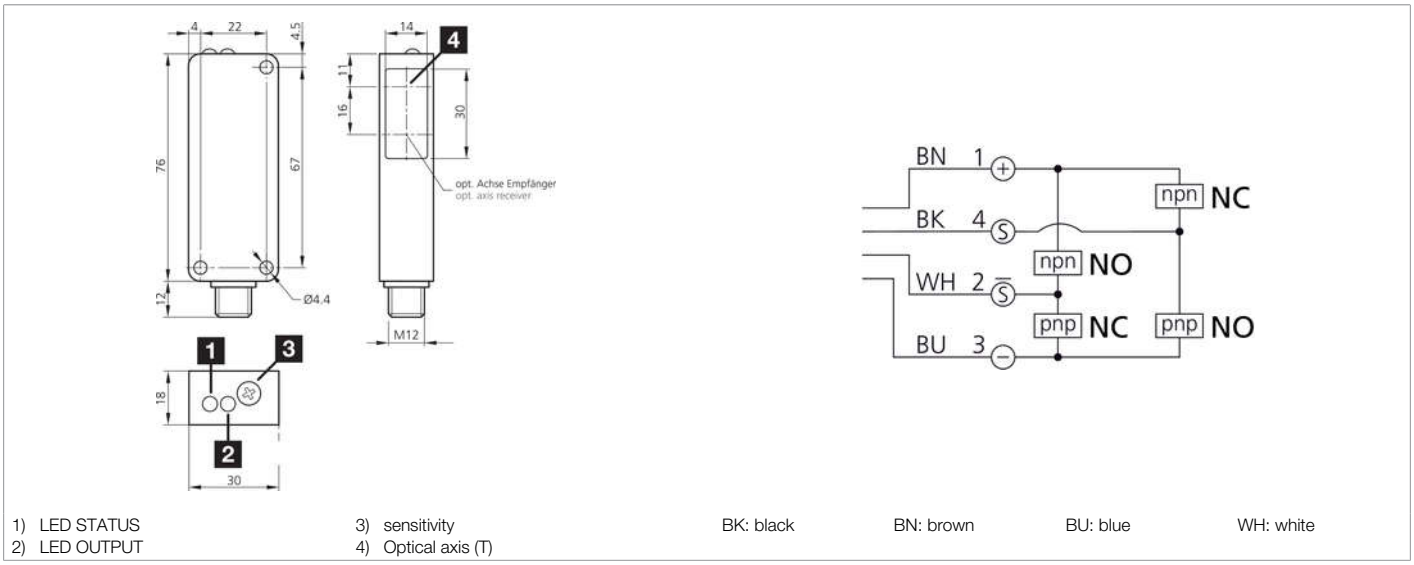

1) LED STATUS
2) LED OUTPUT
3) sensitivity
4) Optical axis (T)

BK: black BN: brown BU: blue WH: white

Function

Technical data (typ.)	+20°C, 24 V DC
Service voltage	10 … 35 V DC
No-load current (max.)	30 mA
Insulation voltage endurance	500 V
Housing dimensions	76 x 30 x 18 mm
Housing length	30 mm
Housing height	76 mm
Housing width	18 mm
Housing material	Die-cast zinc (Black, painted)
Material	Polycarbonate (Window)
Protection class	III, operation on protective low voltage
Operating principle	Diffuse sensor with background suppression
Evaluation	digital
Design	Cuboid design
Switching output	Push-pull, 200 mA, NO/NC, antivalent
Light source	Laser
Laser class	CLASS 2 LASER PRODUCT, 2 (IEC 60825-1)
Color	Red
Wavelength	650 nm (Pp < 1.8 mW t = 12 µs)
Modulation	Clocked

203685
LHT 81 M 400 G4L-IBS
Laser diffuse sensor with background suppression

Technical data (typ.)	+20°C, 24 V DC
Background suppression	Yes
Ambient light immunity	5 kLx
Switching distance	400 to 800 mm as diffuse sensor
Scanning range	40 … 400 mm
Switching hysteresis (max.)	1 %
Sensitivity adjustment	Potentiometer (6-turn)
Switching frequency	1000 Hz
Ambient temperature during operation	-20 … +60 °C
Protection type	IP 67
Connection	Connector, M12, 4-pin
Connection cable	VK …

More information / accessories	https://www.di-soric.com/203685

© di-soric . Right to change reserved