TAA431

Temperature transmitter

TAA123CCDR12-ASIVG/US

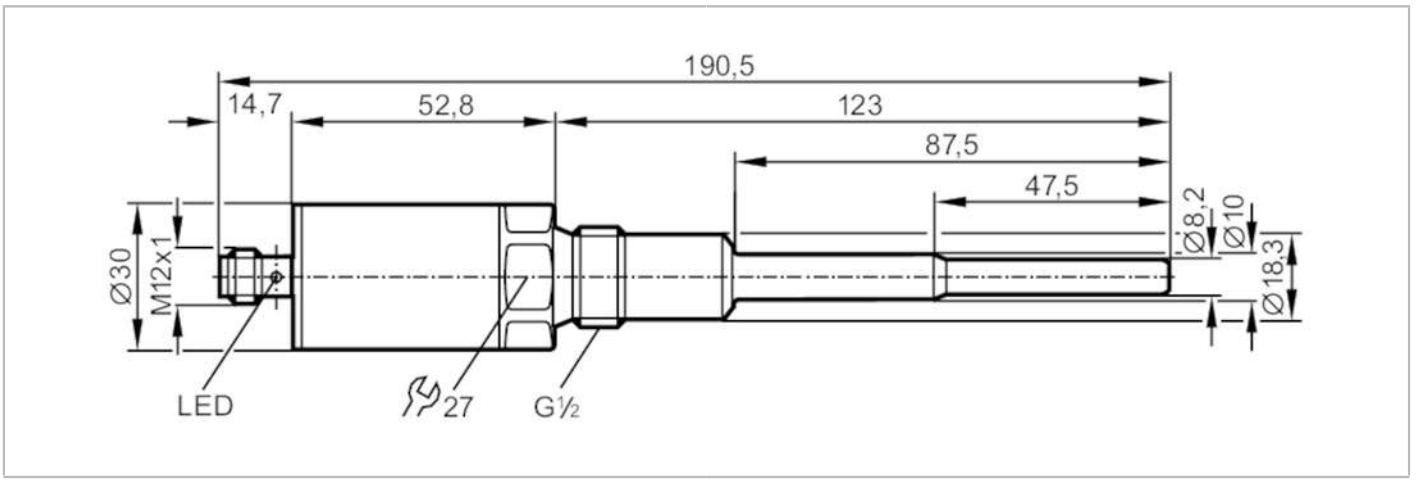

EC 1935/2004 EHEDG Tested FCM

Product characteristics			
Number of inputs and outputs		Number of analogue outputs: 1	
Measuring range		-10...150 °C	14...302 °F
Process connection		threaded connection G 1/2 external thread	
Installation length EL	[mm]	87.5	
Application			
Special feature		Gold-plated contacts	
Measuring element		1 x Pt 1000; (to DIN EN 60751, class A)	
Media		liquids and gases	
Medium temperature		< 150; (< 40 min) °C	< 302; (< 40 min) °F
Pressure rating		300 bar	30 MPa
Note on pressure rating		sensor	
		When mounted in adapters the specifications of the adapter data sheet apply.	
Minimum installation depth	[mm]	15	
Electrical data			
Operating voltage	[V]	18...31.6 DC	
Current consumption	[mA]	< 25	
Protection class		III	
Reverse polarity protection		yes	
Inputs / outputs			
Number of inputs and outputs		Number of analogue outputs: 1	
Outputs			
Total number of outputs		1	
Output signal		analogue signal	
Electrical design		AS-i	
Number of analogue outputs		1	
Overload protection		yes	
Measuring/setting range			
Probe length L	[mm]	87.5	
Measuring range		-10...150 °C	14...302 °F

TAA431

Temperature transmitter

TAA123CCDR12-ASIVG/US

Resolution			
Resolution of analogue output	[K]	0.05	
Accuracy / deviations			
Precision analogue output	[K]	± 0,1 (60°C / 140°F) / ± 0,3 (0...140°C / 32...284°F)	
Temperature coefficient	[% of the span / 10 K]	< ± 0,1; (in case of deviation from the reference condition 25 ± 5 °C)	
Response times			
Dynamic response T05 / T09	[s]	1 / 3; (to DIN EN 60751)	
Operating conditions			
Ambient temperature	[°C]	-25...70	
Storage temperature	[°C]	-40...100	
Protection		IP 68; IP 69K	
Tests / approvals			
EMC		DIN EN 61000-4-2 ESD	4 kV CD / 8 kV AD
		EN 61000-4-3 HF radiated	10 V/m
		DIN EN 61000-4-4 Burst	2 kV
		DIN EN 61000-4-5 Surge	0,5/1 kV
		EN 61000-4-6 HF conducted	10 V
Shock resistance		DIN IEC 68-2-27	50 g (11 ms)
Vibration resistance		DIN EN 60068-2-6	20 g (10...2000 Hz)
MTTF	[years]	348	
AS-i classification			
AS-i version		2.11	
AS-i I/O configuration	[hex]	7	
AS-i ID code	[hex]	3.C	
Mechanical data			
Weight	[g]	258.5	
Housing		cylindrical	
Dimensions	[mm]	Ø 30 / L = 190.5	
Materials		stainless steel (316L/1.4404); stainless steel (304/1.4301); stainless steel (303/1.4305); PA	
Materials (wetted parts)		stainless steel (316L/1.4404)	
Tightening torque	[Nm]	30...50	
Process connection		threaded connection G 1/2 external thread	
Probe diameter	[mm]	10	
Installation length EL	[mm]	87.5	
Displays / operating elements			
Display		operation	1 x LED, green
		failure	1 x LED, red
Remarks			
Remarks		The values for accuracy apply to flowing water.	
		referring to UL: for use on a low voltage circuit with overcurrent protection	
		in accordance with UL873 tab. 28.1 or Imax = 100/Ub (Ub = voltage of the circuit)	
Pack quantity		1 pcs.	

TAA431

Temperature transmitter

TAA123CCDR12-ASIVG/US

Electrical connection

Connector: 1 x M12; coding: A; Contacts: gold-plated

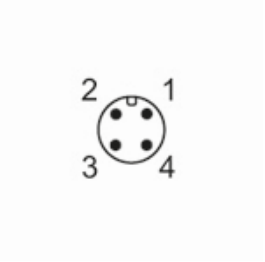

Connection

