EBC065

Splitter box

ZDO8F039MSJ0010H10

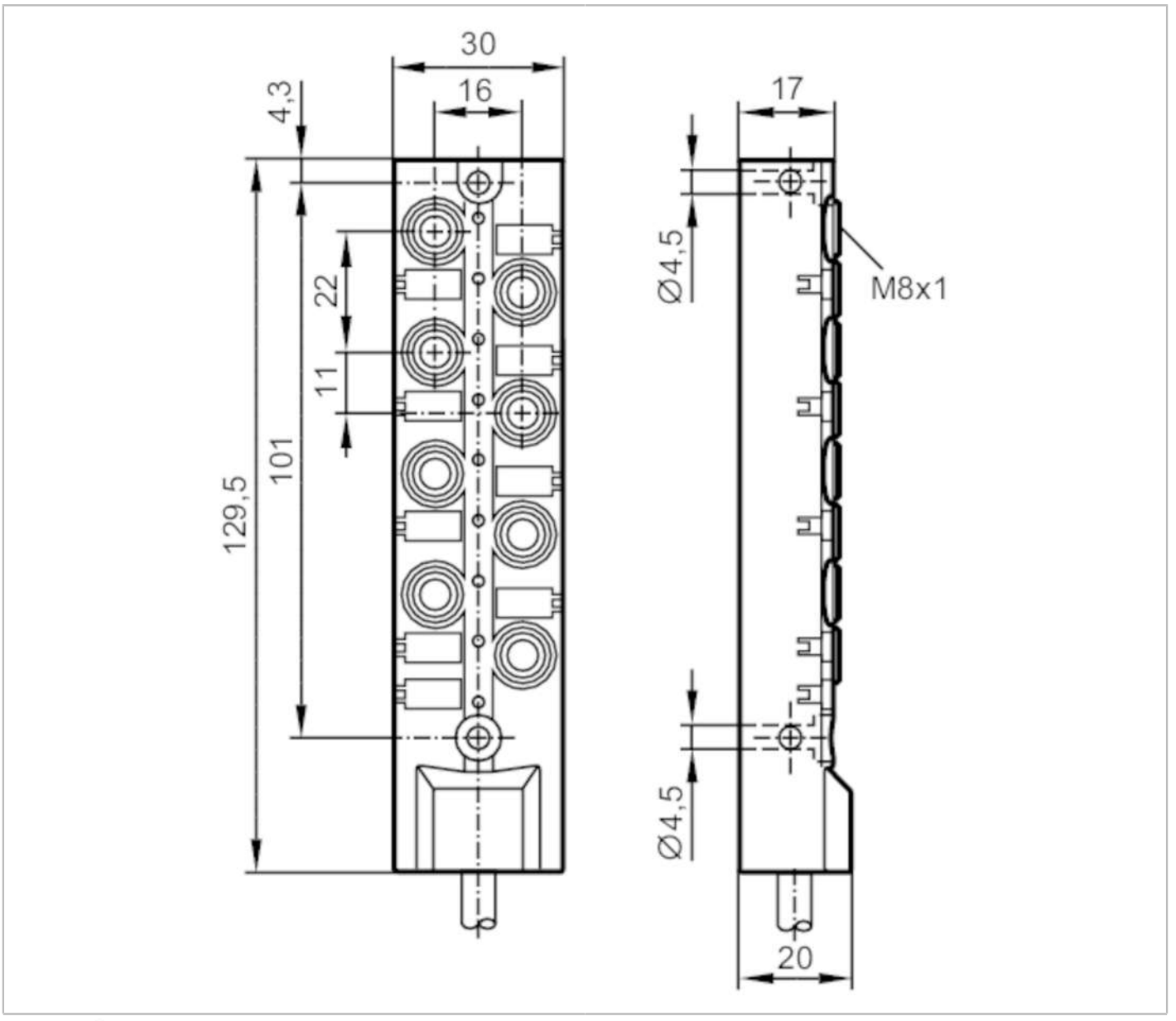

Application		
Special feature		Halogen-free; Gold-plated contacts; Drag chain suitability
Electrical data		
Operating voltage	[V]	10...30 DC; ("supply class 2" to cULus)
Protection class		III
Max. current load per module/slot	[A]	2
Max. current load total	[A]	6
Outputs		
Electrical design		NPN
Operating conditions		
Ambient temperature	[°C]	-25...80

EBC065

Splitter box

ZDO8F039MSJ0010H10

Ambient temperature (moving)	[°C]	-5...60	
Protection		IP 65; IP 67; IP 68	
Mechanical data			
Weight	[g]	906	
Materials		PBT-GF20; brass nickel-plated	
Moulded-body material		PBT-GF 20 / brass, nickel-plated	
Number of ports splitter box		8	
Connector type		M8	
Drag chain suitability		yes	
Drag chain suitability		bending radius for flexible use	min. 10 x cable diameter
		travel speed	max. 3.3 m/s for a horizontal travel length of 5 m and max. acceleration of 5 m/s²
		bending cycles	> 5 Mio.
		torsional strain	± 180 °/m
Displays / operating elements			
Display		switching status	8 x LED, yellow
		operation	1 x LED, green
Accessories			
Accessories (optional)		DIN rail adapter:, E73007	
		Protective cap: M8, E73005	
Remarks			
Pack quantity		1 pcs.	
Electrical connection			
Cable: 10 m, PUR, Halogen-free, black, Ø 9.1 mm; 8 x 0.34 mm² (42 x Ø 0.1 mm) + 2 x 0.75 mm² (96 x Ø 0.1 mm)			
Electrical connection - slot			
Connector: 8 x M8; coding: A; Moulded body: PBT-GF 20 / brass, nickel-plated; Contacts: gold-plated			

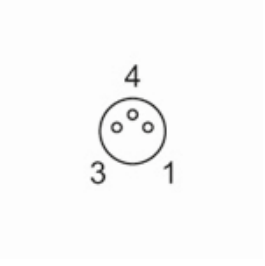

EBC065

Splitter box

ZDO8F039MSJ0010H10

Connection

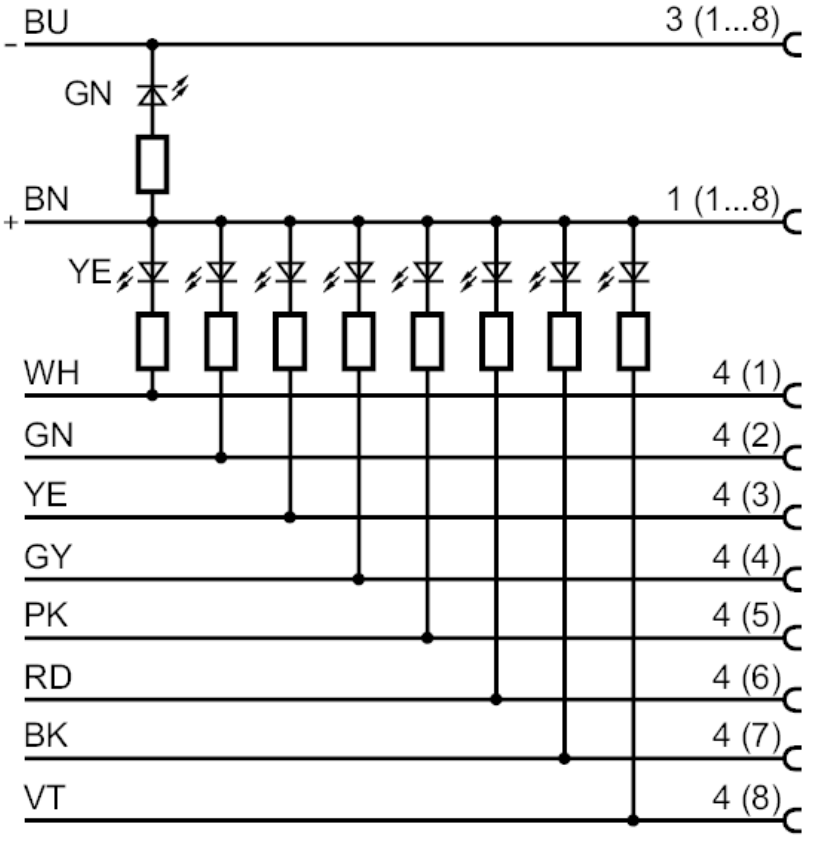

	Core colours :
BK =	black
BN =	brown
BU =	blue
GN =	green
GY =	grey
PK =	pink
RD =	red
VT =	lilac
WH =	white
YE =	yellow