SKF Food Line ball bearing units



Contents

A Product introduction 4

SKF Food Line ball bearing units **4**
A complete range of relubrication-free solutions supporting food safety programs 4
SKF Food Line ball bearing units – Blue Range 5
Hygienic design 6
Housings 8
Back seal 8
End cover 9
Insert bearings and sealing system 10
Bearing grease 11
Product combinations for special zones and applications 12
Zones with limited risk of contamination 12
Applications subject to peak loads 13

B Mounting instructions 14

Mounting instructions **14**
General 14
Tools 14
Mounting bolts 14
Back Seal 15
Shaft tolerances 15
Permissible speed 15
Assembling units 16
Alignment 17
Mounting procedure 18
End covers 21
Blue end covers (blue composite housings) 21
White end covers (stainless steel housings) 21

C Product data 22

Product data **22**
Food and beverages designation rules – Units 22
Food and beverages designation rules – Bearings 23
Product tables **25**

D Equivalent list 89

SKF Food Line equivalent list, metric and inch shafts **89**

SKF Food Line ball bearing units

A complete range of relubrication-free solutions supporting food safety programs

Food and beverage processing is a particularly challenging industry for machinery operations. Strict cleaning regimes for eliminating contaminants and reducing the spread of bacteria mean the machinery will be frequently exposed to pressure washdowns with caustic, antibacterial cleansing agents.

The SKF Food Line ball bearing units offer a complete range of bearing unit solutions for such demanding environments. Lubricated for life and designed to withstand frequent washdowns, the new bearing units solve many of the problems connected to traditional maintenance.

More importantly, they provide a solution to many food safety issues. With food recalls on the rise and safety regulations becoming stricter globally, proactive food safety programs have become the norm.

All SKF Food Line ball bearing units are specifically developed to support these proactive food safety programs. They incorporate SKF's latest advancements in hygienic design and bearing performance to help the industry reach its most critical goals, such as:

- reducing risks to food safety
- increasing the potential for uptime
- reducing maintenance and related costs
- fostering a sustainable culture

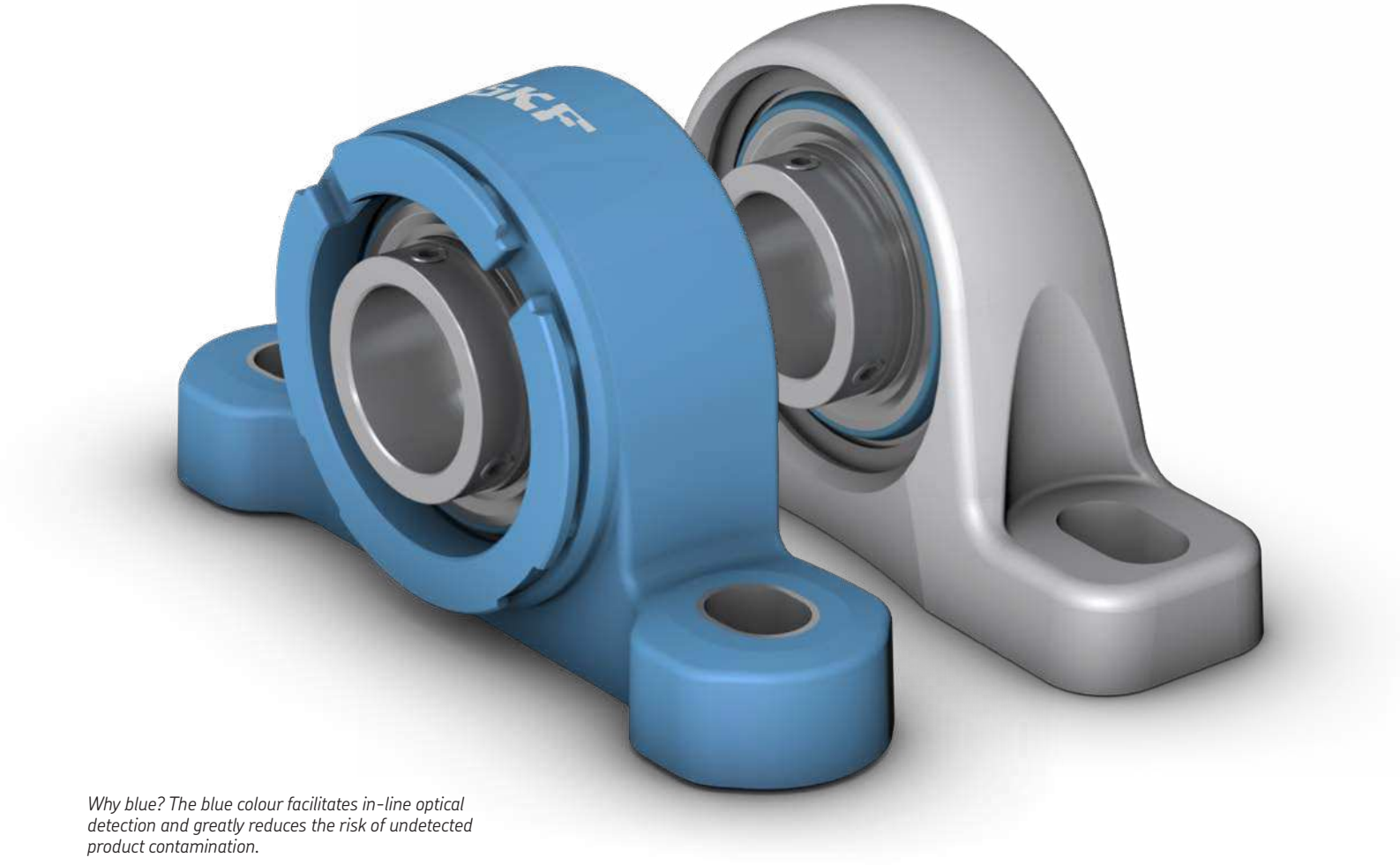

Why blue? The blue colour facilitates in-line optical detection and greatly reduces the risk of undetected product contamination.

SKF Food Line ball bearing units – Blue Range

The blue range units have been developed for compliance with food safety regulations – with food grade and corrosion resistant components, using blue materials for optical detectability. Each element has been designed to balance the highest performance and superior hygienic standards considering EHEDG guidelines.*

Built from the ground up using foodsafe components and hygienic surface design, the units are developed to proactively eliminate contaminant traps and to reduce the spread of bacteria and allergens.

The blue range units can be supplied as open units, or completely sealed units with end cover and back seal.

The patented bearing sealing system and exceptional grease performance contribute to achieving extended bearing life and high reliability. Designed for relubrication-free operations, the units are thus able to reduce maintenance needs and its related grease and labour costs.

The relubrication-free feature and hygienic design contribute to cleaning water savings, as well as a reduced disposal of grease absorbents. This supports an overall preventive versus disposal oriented environmental culture.

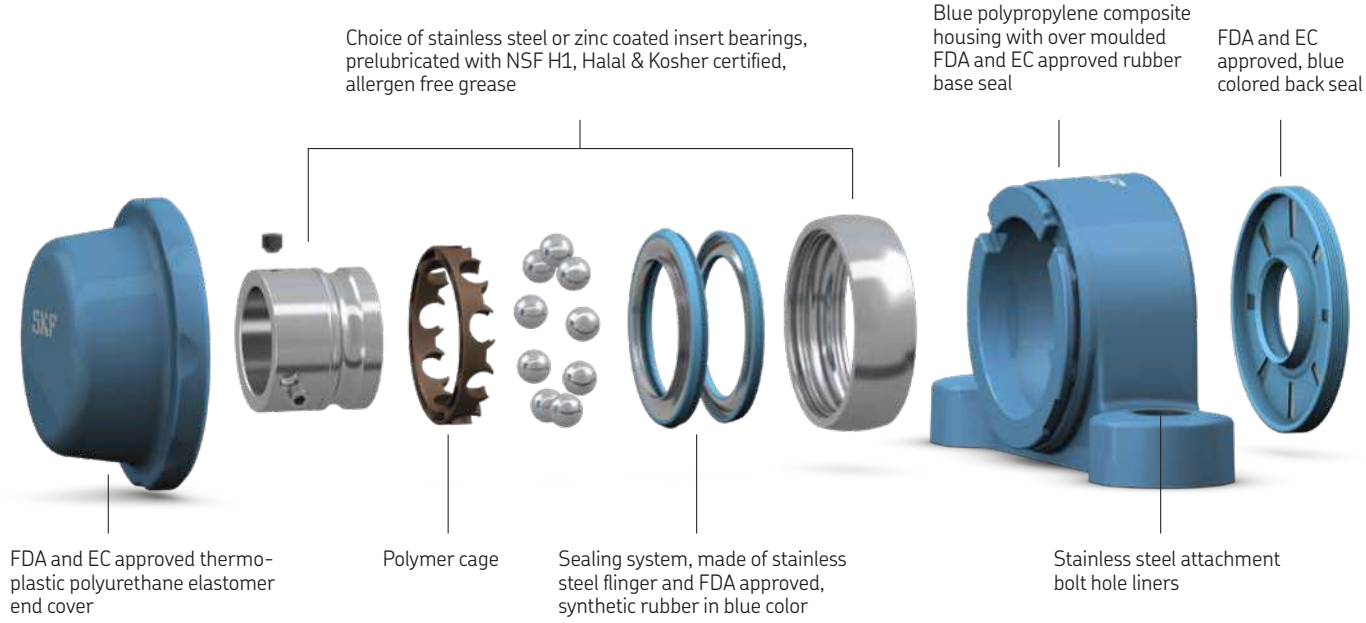

** EHEDG – European hygienic engineering design group – is a forum for food processing equipment manufacturers, users and legislators to discuss issues concerning hygienic design and to stimulate food safety and quality. (source: https://www.ehedg.org/ehedg/tasks-objectives/)*

Hygienic design

Surface geometry of the housing, end cover and back seal are designed to resist the build-up of residue and to facilitate easy cleaning.

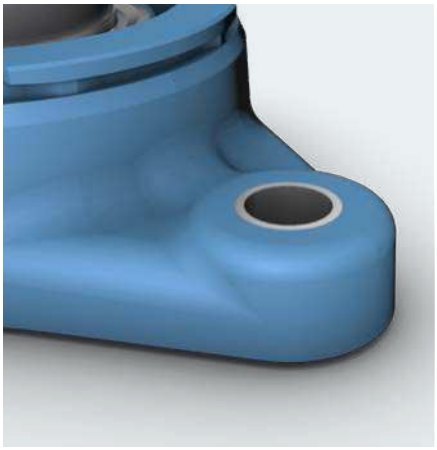

Hygienic geometry of the housing reduces potential contaminant traps.

The housing is designed to avoid crevices or recesses where soiling and bacteria might accumulate or become trapped.

There are no split sleeves on the mounting bolt holes, and the manufacturing mould marks are kept at a minimum.

Further, the housing has no sharp corners. All surfaces are angled to prevent pooling. The flat areas on its exterior are those provided to seat rubberised mounting washers.

These advanced housing shapes are the subject of three different design protections.

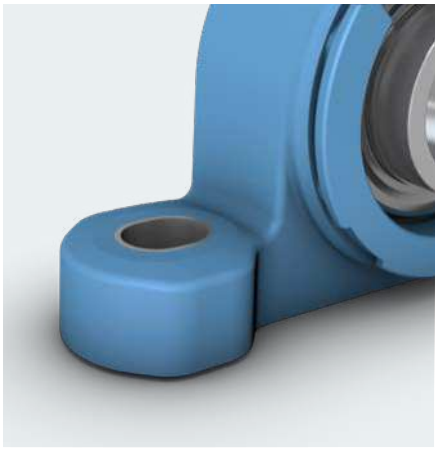

All external surfaces of the SKF blue range housing have a smooth surface finish.

Smooth exterior surfaces on the unit is key to achieving good drainability and cleanability – critical factors in preventing bacterial build-up on the exterior of the bearing unit.

The finish is comparable to food industry requirements for the internal surface finish on hygienic tubing and piping.



The construction makes use of over moulding to achieve an effective base seal.

On its base or mounting face, a food grade rubber forms the base seal. The rubber is selectively over moulded with the composite of the housing to create an effective seal.

As the housing is tightened down, the over-moulded rubber deforms – thereby providing the base seal to the mounting frame. Having this as an integral part of the housing design makes it easier to achieve a more consistent and effective sealing function. It also simplifies the installation.



The end cover incorporates positive locking to the housing to help protect against it being accidentally dislodged.

End covers only contribute to hygiene if they can be relied upon to remain in place and sealed.



The end cover does not require an additional O-ring, which could easily be displaced during mounting or dismounting.

The end cover material is a high-performance thermoplastic polyurethane elastomer. This material provides a rigid, protective end cover with sufficient flexibility to form an effective interference seal with the housing.

Both the retention and sealing features of this end cover are patented.

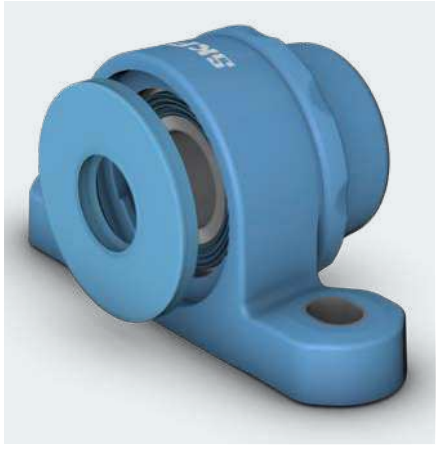

The back seal offers an additional double sealing protection, stopping food products from entering the bearing cavity.

The back seal seals dynamically against the shaft and statically with the housing. Both sealing features are intrinsic to the detailed design of the back seal and rely on no additional components, such as a spring.

The integral sealing solution of the back seal reduces the risk of damaging components and contaminating the product line. It also eliminates the risk of loss of a separate component.

Housings

The SKF blue range housings are strong, yet lightweight and chemically resistant. Their hygienic design features make them ideal for following the highest food safety standards.

The housings remain highly stable dimensionally and maintain their expected physical properties despite repeated operational and washdown cycles.

Particularly in wet environments, the housings are more reliable compared to polyamide (PA) and Polybutylene terephthalate (PBT). PA (not geometrically stable) and PBT (subject to hydrolysis if washed down with hot water) are the main two materials commonly utilized in the market.

The composite material for the blue range housings is reinforced polypropylene – a material chosen for its dimensional stability and chemical resistance to detergents and contaminants (**table 1**). Importantly, polypropylene is hydrophobic, distinguishing it from conventional composite housing materials.

The housings feature 40% long glass fibres reinforcement. This reduces the tendency of the housings to creep under temperature and load.

Table 1

Chemical resistance ratings for polypropylene

Strong alkalies	Excellent
Weak acids	Excellent
Strong acids	Good
Alcohol	Good

The blue range housings are available in the following six designs – all covered by design protection:

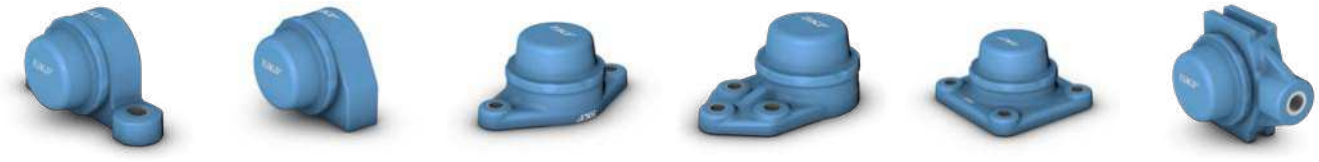

Plummer block | Short base plummer block | Oval flanged | 3-bolt flanged | Square flanged | Take-up

Back seal

The primary purpose of the back seal is to protect the bearing unit from “shaft-side” contamination.

The external face of the back seal has been designed to provide sealing against cut-outs. This could for instance mean an enclosure wall or panel that has been drilled to allow clearance for the shaft to pass through to the bearing unit.

On a flanged unit this can be used to seal the shaft access or clearance hole in order to avoid the creation of a cavity behind the panel, where food debris could otherwise collect.

The composite blue housing is the only housing that can host a back seal. It can only be mounted in a unit with a dedicated bearing.

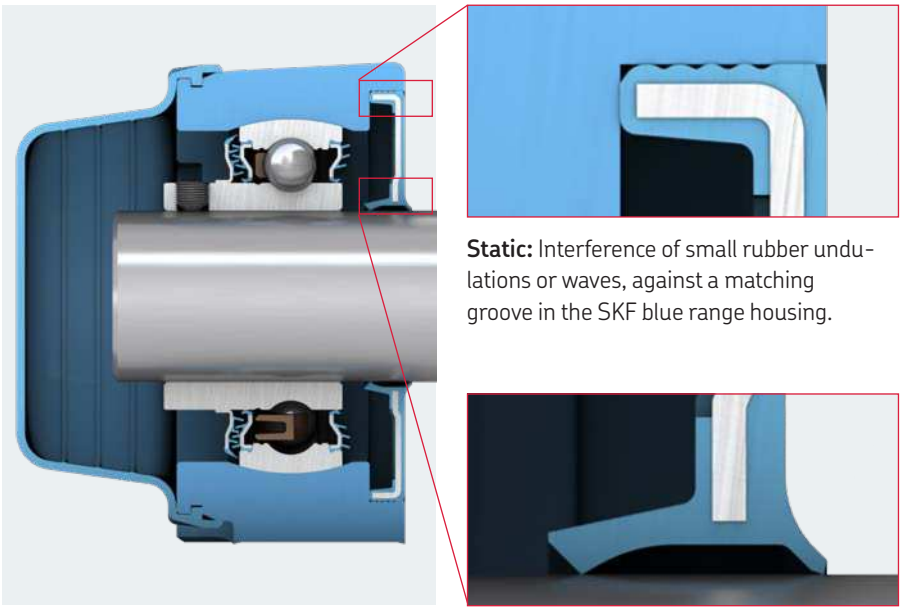

Static: Interference of small rubber undulations or waves, against a matching groove in the SKF blue range housing.

Dynamic: A twin lip seal with sufficient interference to cope with 1-degree misalignment.

End cover

The end cover improves operator safety and provides an additional barrier to the ingress of process material and cleaning agents.

Positive retention to the housing is provided by four circumferential interlocking areas, which require a locked cover to be rotated before it can be removed.

In the locked position, each of the four "teeth" on the end cover are secured in position by two adjacent housing teeth. This helps protect against the end cover being dislodged accidentally or during cleaning.

The resistance to rotation provided by the inter-locking teeth must be overcome before the cover can be rotated.

The end cover is designed to be routinely opened for inspection and then re-locked. Both the housing and the end cover feature laser marked lock and unlock symbols, so that the end cover lock status can be easily confirmed.

Twist to lock or to unlock (1/8 turn), with no tools required.

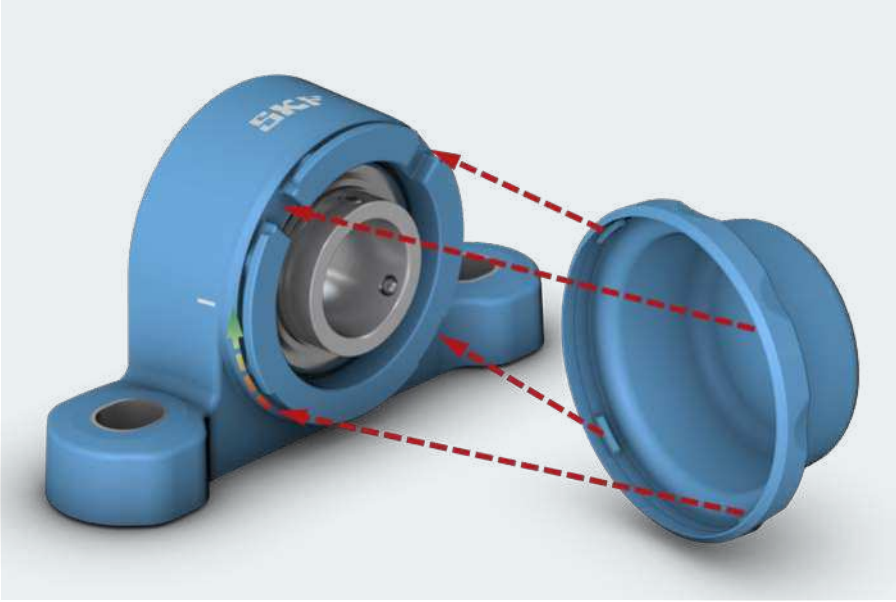

The end cover locking mechanism and sealing features are patented.

The housing marker aligns with the end cover symbol:

- ○ a circle – end cover unlocked, ready to pull away or to relock.
- ● a filled circle – end cover now correctly locked in position.

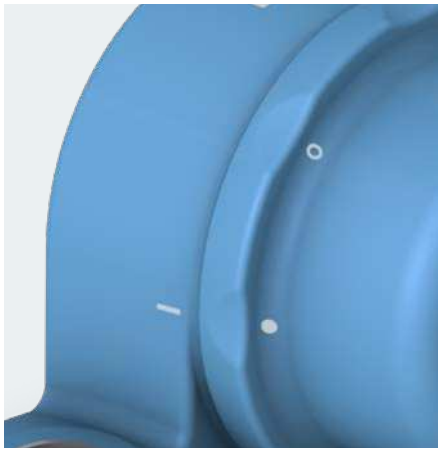

End cover resistance
The end cover's ability to resist high pressure cleaning at 70 bar has been tested. Throughout the tests, the end cover remained locked in place, and completely sealed. An inspection of the interior of the end cover on completion of the tests, confirmed no soiling was present.

End cover effectiveness
Repetitive opening and closing operations that were the equivalent of weekly checks over a four-year period, resulted in no loss of effectiveness in the locking and sealing functions.

Insert bearings and sealing system

At the heart of each unit is a high-quality corrosion resistant insert bearing with AISI grade 420 stainless steel inner ring, outer ring and balls. The Blue Range bearing units also incorporate a patented, bearing sealing system that adopts a radically different approach to preventing damage caused by detergent ingress into the bearing.

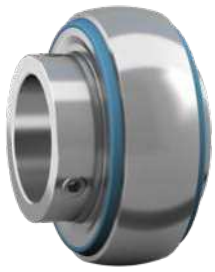

The bearing is designed as a single row deep groove ball bearing with a sphered (convex) outside surface to the outer ring. The sphered surface matches a correspondingly sphered, but concave, housing bore. The design minimises internal loads on the bearing that would exist if initial misalignment went uncorrected.

The bearing inner ring is extended on the outboard/locking side. It is locked on the shaft with two stainless steel grub screws that are positioned at 120°, minimising inner ring distortion while maintaining good gripping strength.

The inner ring of the bearing is dimensioned to accommodate the fitting of the back seal, letting the units be deployed in applications with the highest hygienic design and food safety requirements (e.g. open food processing zones). The sealing system consists of a non-contacting seal and a flinger, located at the outer circumference (**fig. 1**). The flinger provides the first barrier against the ingress of both solid and liquid contaminants. This closes against the bearing outer ring when pressure washed.

Next, the design provides a series of internal concentric "gutters" (**fig. 2**) which contain and collect any drops of detergent that penetrate and then guide them, circumferentially, around and away from the bearing (**fig. 3**).

Due to this innovative design, the sealing performance is not limited by the lip contact force against the shaft. This means that the seal can achieve high levels of protection coupled with low energy consumption. The internal gutters are designed to guide detergent away from the bearing. Whereas the aim of a detergent is to penetrate and clean, this novel approach aims to work with rather than against the detergent.

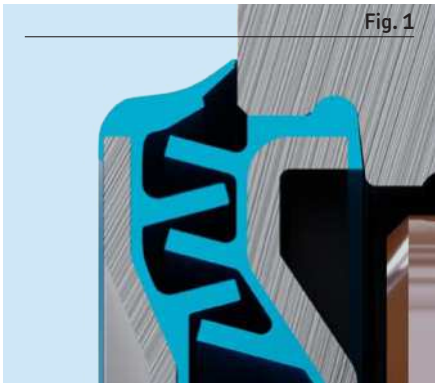
Fig. 1

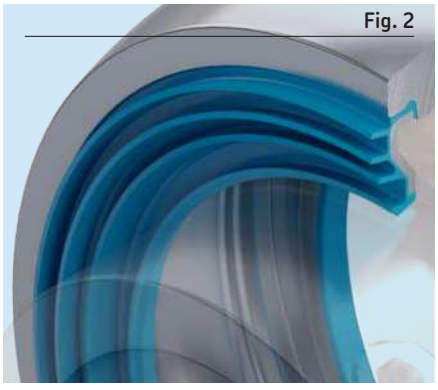
Fig. 2

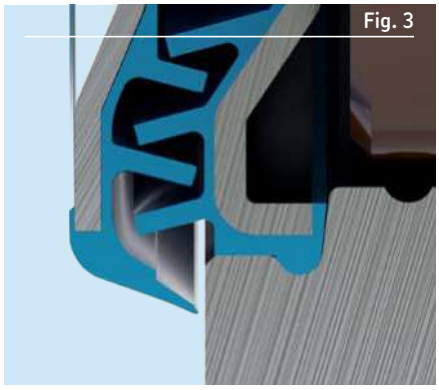
Fig. 3

The bearing seals are patented.

Sealing system effectiveness

Accelerated testing has shown that this design provides better sealing performance by actively dealing with detergent ingress rather than seeking to passively exclude it. In testing, detergent droplets were allowed to enter the seal at a rate of 5 drops per minute over a period of 500 hours, after which the internals of the seal were examined.

The post-test analyses confirmed that detergent ingress is typically contained within and channelled away by the first or second of the multiple gutters.

In addition, both the friction torque and the temperature mea ured from trials of the 206 size are considerably reduced, considering that there is only one contacting lip instead of two.

Bearing grease

All units are lubricated for life with NSF-approved, SKF food-grade grease for relubrication-free operation. The high-quality grease is registered by NSF as a category H1 (lubricant acceptable for use in applications where there is potential for incidental food contact).

The grease has been selected because it provides good resistance to the separation of the base oil and the thickener in the presence of detergent. Greases without this enhanced resistance can separate, resulting in loss of oil past the seal, then loss of lubrication to the seal lips.

This can lead to scoring damage to the mating surface on the inner ring shoulder. The NSF registration confirms this SKF grease fulfils the requirements listed in the US Food and Drug Administration's guidelines under 21 CFR section 178.3570.

The technical specifications of this grease are listed in **table 2**.

The grease contains no ingredients from the 14 allergens and allergen categories that must be declared in food products and is also free from traces of beef, pork and chicken. Additional certifications for the grease have been secured from AMERICAN HALAL FOUNDATION (AHF) and 1K Kosher.

Allergens and allergen categories

- Cereals containing gluten, namely: wheat (such as spelt and khorasan wheat), rye, barley, oats
- Crustaceans for example prawns, crabs, lobster, crayfish
- Eggs
- Fish
- Peanuts
- Soybeans
- Milk (including lactose)
- Nuts; namely almonds, hazelnuts, walnuts, cashews, pecan nuts, Brazil nuts, pistachio nuts, macadamia (or Queensland) nuts
- Celery (including celeriac)
- Mustard
- Sesame
- Sulphur dioxide/sulphites, where added and at a level above 10 mg/kg or 10 mg/L in the finished product. This can be used as a preservative in dried fruit
- Lupin, which includes lupin seeds and flour and can be found in types of bread, pastries and pasta
- Molluscs like, mussels, whelks, oysters, snails and squid

Table 2

Technical specifications of the SKF GFM grease for Food Line ball bearing units

Temperature range[1)]	Thickener	Base oil type	NLGI consistency class	Base oil viscosity [mm²/s] at 40 °C (104 °F)	at 100 °C (212 °F)	Grease performance factor (GPF)
–50 0 50 100 150 200 250 °C –60 30 120 210 300 390 480 °F	Calcium Sulfonate Complex	Mineral	2	113,0	5,8	1,5

1) Refer to SKF catalogue Rolling bearings – the SKF traffic life concept

Grease effectiveness

In SKF testing, droplets of detergent were injected into the test bearings using a peristaltic pump. The results showed a good resistance to degradation in the presence of detergent.



Product combinations for special zones and applications

In addition to the completely sealed blue range units, other product combinations are available. For instance, in applications where a fully sealed bearing unit is not required from a food safety perspective, or in environments subject to peak loading. All product combinations feature the same advanced bearing seal arrangement and are supplied lubricated for life with the same highly effective grease as the completely sealed blue range.

Zones with limited risk of contamination

Closed food processing or areas where packaged goods are being handled are typical zones with limited risk of contamination. The SKF Food Line ball bearing units offer high performing solutions for such areas.

These product combinations include a stainless steel insert bearing in the blue, hygienically designed, composite housing with no backseal.

In addition, there is also the option of ordering the blue end cover which improves personnel safety by enclosing the exposed shaft end.

For applications where it is considered acceptable, the stainless steel bearing can be substituted for a zinc coated insert bearing.

Bearings with this coating resist attack from water and acidic or caustic solutions far better than uncoated insert bearings, or bearings with black oxide coatings.

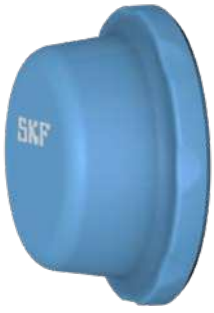

End cover
(optional)

ECB 5XX

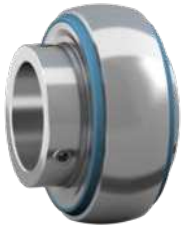

Stainless steel bearing

YAR 2XX(–XXX)–2LPW/SS

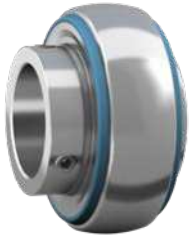

Zinc coated bearing

YAR 2XX(–XXX)–2LPW/ZM



Composite housing
(with no backseal)

F2BC 5XX

Applications subject to peak loads

SKF Food Line stainless steel ball bearings and housings are cast from AISI 300 series stainless steel, providing good durability and resistance to peak loads. Cast stainless steel is resistant to aggressive washdown chemicals. The housings are therefore not affected by strong concentrations of chlorine, hydrogen peroxide and many other chemicals. In addition, the housings feature machined flat bases; the absence of any unnecessary crevices or pockets on the external surfaces and a smooth finish mean that the stainless steel housings are easy to clean with no recessed areas for debris and bacteria to accumulate or become trapped.

The SKF Food Line ball bearing units with stainless steel housings are offered with stainless steel insert bearings and a white end cover, available as an option.

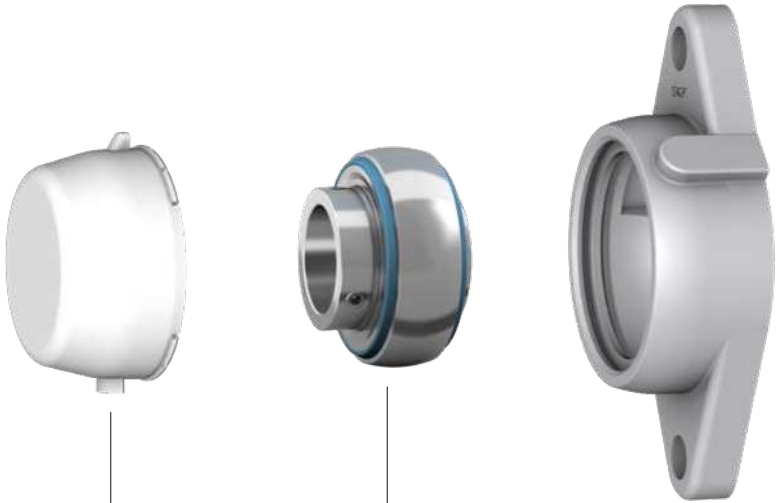

End cover
(optional)

ECW 2XX

Stainless steel bearing

YAR 2XX(–XXX)–2LPW/SS

Stainless steel housing
(with no backseal)

F2BSS 5XX

The stainless steel housings are available in the following four designs:



Plummer block



Short base plummer block



Oval flanged



Square flanged

Mounting instructions

General

To provide proper bearing performance and prevent premature failure, all relevant procedures and cautions should be observed when mounting SKF Food Line ball bearing units.

As precision components, they should be kept clean and handled carefully when mounting. It is also important to choose the appropriate method of mounting and to use the correct tools.

The method used for mounting SKF Food Line ball bearing units depends on the:

- overall machine design
- bearing housing design
- method used to attach the unit to the shaft.

Tools

To mount or dismount SKF Food Line ball bearing units, the following tools are required:

- a hexagonal key (hex wrench) to tighten or loosen grub (set) screws
- a spanner to tighten or loosen the mounting bolts.

Mounting bolts

To attach SKF Food Line ball bearing units to the support surface and to increase the hygienic safety for the overall product, SKF recommends using hygienic design bolts and rubberised washers, **fig 1**.

In order to assure the ball bearing unit correct positioning and load withstanding, SKF advises to not exceed the machine wall through holes diameters as per **table 4**, **5** and **7**, and to follow the tightening torque values highlighted in **table 2**.

Fig. 1

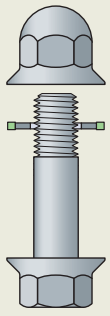

Table 1

Recommended fits

Operating conditions	Tolerance class[1)]
P > 0,05 C and/or high speeds	h6
0,035 C < P ≤ 0,05 C and/or low speeds	h7
0,02 C < P ≤ 0,035 C and/or low speeds	h8
Simple bearing arrangement or P ≤ 0,02 C	h9–11

[1)] All ISO tolerance classes are valid with the envelope requirements (such as h7Ⓔ) in accordance with ISO 14405-1.

⚠ WARNING

Failure to carefully follow applicable mounting instructions and not to have the metallic bushes in contact with machine frame on composite housing, may results in premature bearing failure or improper performance. For further information, contact the SKF application engineering service.

Back Seal

The unit with back seal already mounted has to be placed without end cover on the shaft for Pillow block and on the machine frame for flanged units (**fig. 2**).

End cover is mounted in order to complete the unit mounting on the machine position (**fig. 3**).

Shaft tolerances

The recommended fits for SKF Food Line ball bearings are listed in **table 1**. For moderate loads (0,035 C < P ≤ 0,05 C), the shaft seats should be machined to an h7 tolerance.

For light loads and low speeds, an h8 shaft tolerance is sufficient, and for very simple applications, h9 to h11 shaft tolerances may be used.

Fig. 4 illustrates the relative position of the upper and lower limits of the most commonly used ISO shaft tolerance classes. The values of these ISO tolerances are listed in **table 2**.

Permissible speed

SKF Food Line ball bearing units should not operate at speeds above the limiting speeds listed in the product tables. Permissible speed is also influenced by the shaft diameter tolerance.

When using these bearing units on shafts with wider tolerances than h6, compare the speed values listed in the product tables with those listed in **table 3**. The lower value is the maximum or limiting permissible speed.

Fig. 2

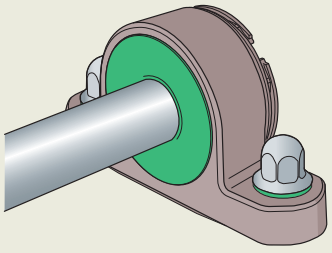

Fig. 3

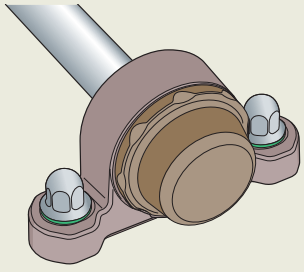

Fig. 4

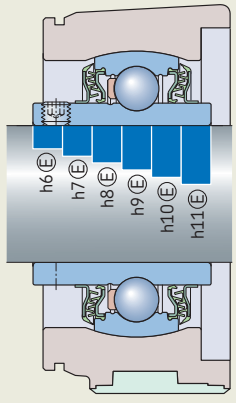

Table 2

ISO shaft deviations for SKF Food Line

Shaft diameter d		Shaft diameter deviations h6Ⓔ Deviation		h7Ⓔ		h8Ⓔ		h9Ⓔ		h10Ⓔ		h11Ⓔ	
over	incl.	high	low	high	low	high	low	high	low	high	low	high	low
mm		µm											
10	**18**	0	–11	0	–18	0	–27	0	–43	0	–70	0	–110
18	**30**	0	–13	0	–21	0	–33	0	–52	0	–84	0	–130
30	**50**	0	–16	0	–25	0	–39	0	–62	0	–100	0	–160
50	**80**	0	–19	0	–30	0	–46	0	–74	0	–120	0	–190
80	**120**	0	–22	0	–35	0	–54	0	–87	0	–140	0	–220

Table 3

Permissible speeds for SKF Food Line

Bearing size[1] d	Permissible speeds for shafts machined to tolerance class h7Ⓔ	h8Ⓔ	h9Ⓔ	h11Ⓔ
–	r/min			
04	5 300	3 800	1 300	850
05	4 500	3 200	1 000	700
06	4 000	2 800	900	630
07	3 400	2 200	750	530
08	3 000	1 900	670	480
09	2 600	1 600	560	400

[1] For example, bearing size 07 includes all bearings based on a Y207 bearings such as YAR 207-2LPW/SS, YAR 207-104-2LPW/SS, YAR 207-106-2LPW/SS, YAR 207-107-2LPW/SS.

Assembling units

In cases where SKF Food Line ball bearings and bearing housings are not supplied as a unit, the first step is to assemble the bearing into the housing.

The mounting procedure is: tighten the housing on the machine frame (**fig. 5**) and place the bearing when the housing is fixed

Insert the bearing into the filling slot in the housing bore (**fig. 6**) and rotate it by hand within the housing until the bearing and housing bore axes align as closely as possible.

NOTE
The bearing must be inserted so that the inner ring grub screws will be on the front (end cover) side of the housing.

With a round piece of wood or pipe of a suitable diameter as a dummy shaft, now rotate the bearing a few turns in each direction. Whilst exercising the bearing in this way, vary the angle of the "shaft" to encompass all orientations (**fig. 7**).

Fig. 5

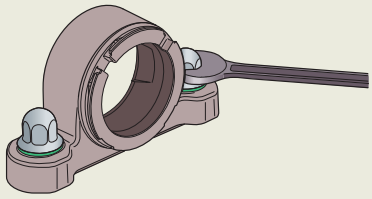

Fig. 6

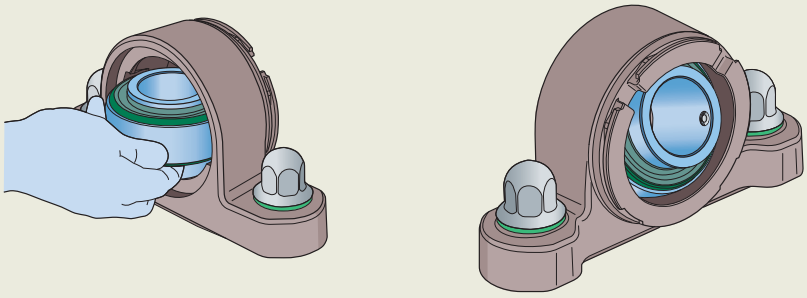

Fig. 7

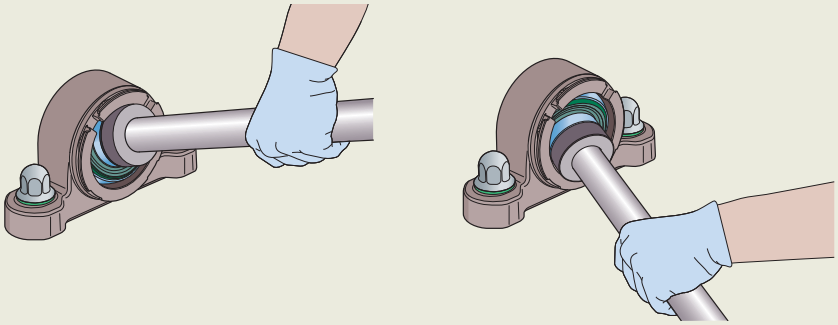

Alignment

When mounting SKF Food Line ball bearing units it is important for the performance and longevity of the bearing that any misalignment is kept within acceptable limits (**fig. 8**).

In this regard, the sphered nature of the bearing outer ring and the housing bore can accommodate some static misalignment.

Static, as illustrated above, refers to any initial misalignment between housing and shaft/bearing inner ring arising from mounting errors.

For the fully sealed units this is limited, by the back seal, to ±1-degree, whilst for housings without the back seal, up to ±5-degrees can be accommodated.

By contrast, dynamic misalignment: the operational misalignment of the shaft (between bearings on the same shaft), must be limited to no more than a few minutes of arc.

Fig. 8

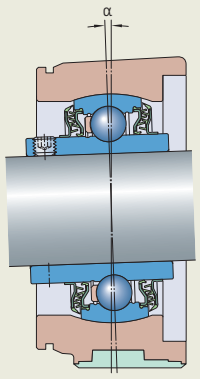

Mounting procedure

1 Remove any burrs on the shaft with emery cloth or a fine file, wipe clean with a cloth. Depending on loads and speeds, define the appropriate shaft tolerance from **tables 1** and **2**, and check the shaft diameter. Mount any components that are on the shaft between the two SKF Food Line ball bearing units make sure the housing base and mating surfaces are clean and free of any debris or burrs. Ensure the supporting surface is flat. The flatness should be within the IT7 tolerance grade and the roughness should be $Ra \leq 12{,}5$ µm. If the housing requires shims or adjustment, the shims must extend the full length and width of the base (**fig. 9**).

2 Mount any components that are on the shaft between the two SKF Food Line ball bearing units.

Slide the SKF Food Line ball bearing unit onto the shaft with grub screws facing outwards and ensure that shaft is correctly placed (**fig. 10**).

3 For plummer block units, fit the attachment bolts but do not tighten them (**fig 11**). For flanged units, fasten them securely to the machine wall. For composite housings assure that the metallic bushes in bolt areas will be in contact with the machine wall.

4 Mount the other SKF Food Line ball bearing unit on the other end of the shaft following the phases shown in **fig. 9** to **11**.

NOTE

For attachment bolt hole sizes, for reference see **table 4** to **7**.

Fig. 9

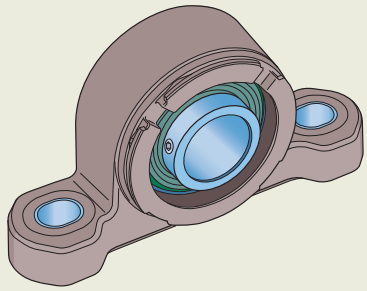

Fig. 10

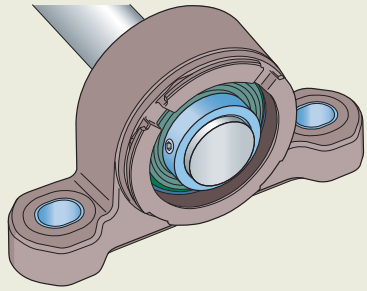

Table 4

Attachment bolt hole sizes according to DIN EN 20273

Units for metric shafts	
Bolt size	**Trough hole diameter**
G	d_m
mm	mm
8	9
10	11
12	13,5
16	17,5

Table 5

Attachment bolt hole sizes according to ASME

Units for inch shafts	
Bolt size	**Trough hole diameter**
G	d_m
in.	in.
3/8	13/32
7/16	15/32
1/2	9/16
5/8	11/16

Fig. 11

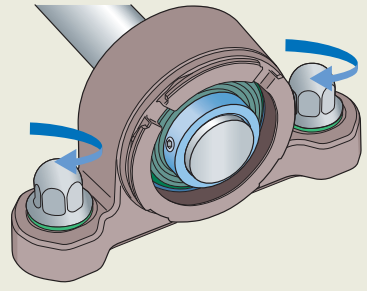

5 Carefully align both SKF Food Line ball bearing units using the shaft. For plummer block housings, fully tighten the attachment bolts for all units to the tightening torque shown in **fig. 12** and according to **table 7**, **page 20**.

For flanged housings, securely fasten the second unit to the machine wall (**fig. 13**). Align the shaft in the bearing arrangement axially and – if possible – turn it a few times. Tighten the grub screws in the inner rings of both units to the tightening torque indicated in **table 7**, **page 20**, **fig. 14** and **15**. Additionally if applicable, mount the end cover(s).

6 Tighten the grub screws in the inner rings of both units to the tightening torque indicated in **table 6**.

7 If applicable, mount the end cover(s).

Fig. 12

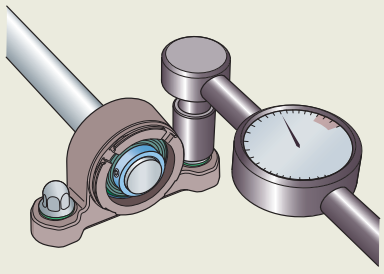

Fig. 13

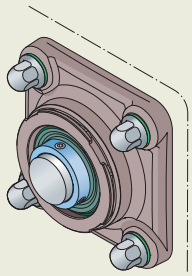

Fig. 14

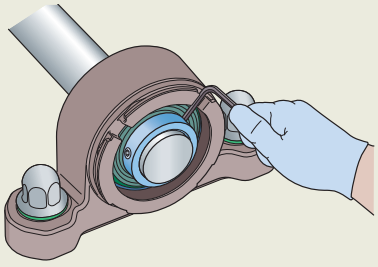

Fig. 15

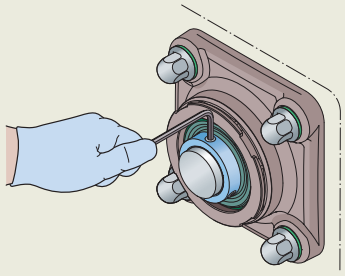

Table 6

Hexagonal keys to tighten grub screws in inner rings – sizes and tightening torque

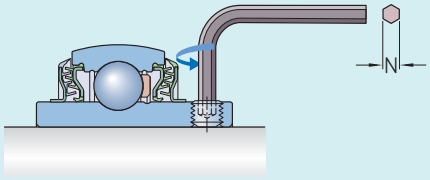

Bearing size[1]	Bearing or unit with metric bore screw size	Hexagonal key size N	Tightening torque	Bearing or unit with inch bore screw size	Hexagonal key size N	Tightening torque
–	–	mm	Nm	–	in.	Nm
04	M6×0,75	3	4	1/4-28 UNF	1/8	4
05	M6×0,75	3	4	1/4-28 UNF	1/8	4
06	M6×0,75	3	4	1/4-28 UNF	1/8	4
07	M6×0,75	3	4	5/16-24 UNF	5/32	6,5
08	M8×1	4	6,5	5/16-24 UNF	5/32	6,5
09	M10×1	5	16,5	3/8-24 UNF	3/16	16,5

[1] For example, bearing size 07 includes all bearings based on a Y207 bearings such as YAR 207-2LPW/SS, YAR 207-104-2LPW/SS, YAR 207-106-2LPW/SS, YAR 207-107-2LPW/SS.

Table 7

Recommended tightening torque for attachment bolts

Bolt size		**Tightening torque for unit series**				
G		F2BC	F3BBC	F4BC	P2BC	P2BTC
mm	in.	Nm				
M8	–	–	–	–	–	40
M10	3/8	50	40	40	50	50
M12	1/2	70	50	50	70	70
M16	5/8	100	80	80	100	100
–	3/8-16 UNC	–	–	–	–	50
–	7/16-14 UNC	–	–	–	–	60
–	1/2-13 UNC	–	–	–	–	70
–	5/8-11 UNC	–	–	–	–	100

End covers

The **product tables 1.1** to **1.13** show the appropriate end cover for each bearing unit and the distance A5 that the end cover protrudes once mounted on the housing (**fig. 16** and **17**). Prior to starting the mounting procedure, make sure to have available the correct end cover and check if the A5 dimension is suitable for your application arrangement.

NOTE

The end cover is sold separately in all the units different from DFH (fully sealed) solution. So for blue range not fully sealed and stainless steel end cover have to be ordered separately.

⚠ WARNING

Rotating parts hazard.
To avoid serious injury, do not mount or dismount an end cover unless the shaft has stopped rotating and the machine has been locked out or the shaft has been secured so it can't rotate.

Blue end covers (composite housings)

Fig. 16

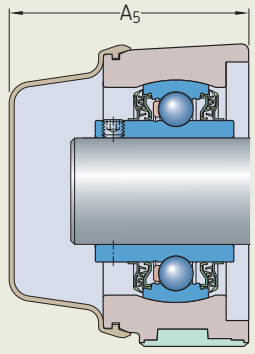

Mounting/dismounting instructions

1 Remove the end cover from its packaging.
2 Identify the alignment mark on the housing and orientate the end cover so that this is aligned with the "open circle" marking on the end cover:

○

3 Engage and rotate the end cover, 1/8 of a turn until the housing marker is now aligned to the closed circle marking on the end cover:

●

The end cover is now in the closed position.
4 To remove, rotate the end cover back so that the housing marker and the open circle align, then pull away the cover.

White end covers (stainless steel housings)

Fig. 17

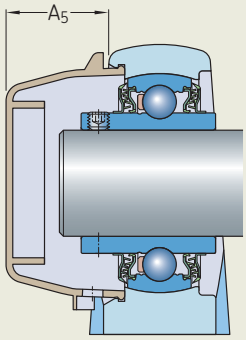

Mounting instructions

1 Remove the end cover from its packaging.
2 Identify the end cover groove in the housing and make sure it is clean and free of any debris.
3 Hold the cover at an angle against the housing and insert the cover tabs into the housing groove.
4 Push the cover towards the housing until all the tabs snap into the housing groove. Where needed, help the tabs into position by bending the cover edge slightly as required.
5 Make sure the cover is securely in place. If needed, remove the end cap and start the process again from step 2.

Dismounting instructions

1 Insert a screwdriver or a pointed tool into the space between the bearing housing and the dismounting slot on the end cover.
2 Unlock the cover by levering it until the first end cover tabs come out from the housing groove. Hold the cover to make sure that it does not fall, and complete the unlocking process by hand.

Product data

Food and beverages designation rules – Units

The new designation systems for the SKF Food Line insert bearings and ball bearing units, have been completely renovated in order to be user friendly for a fast as well clear identification, and modular to easily follow the customer desired final variant.

More details about the developed nomenclature can be obtained from the designation charts:

- SKF Food Line ball bearing unit designation system (**pages 26** to **87**)
- SKF Food Line insert bearing designation system (**pages 86** to **87**)

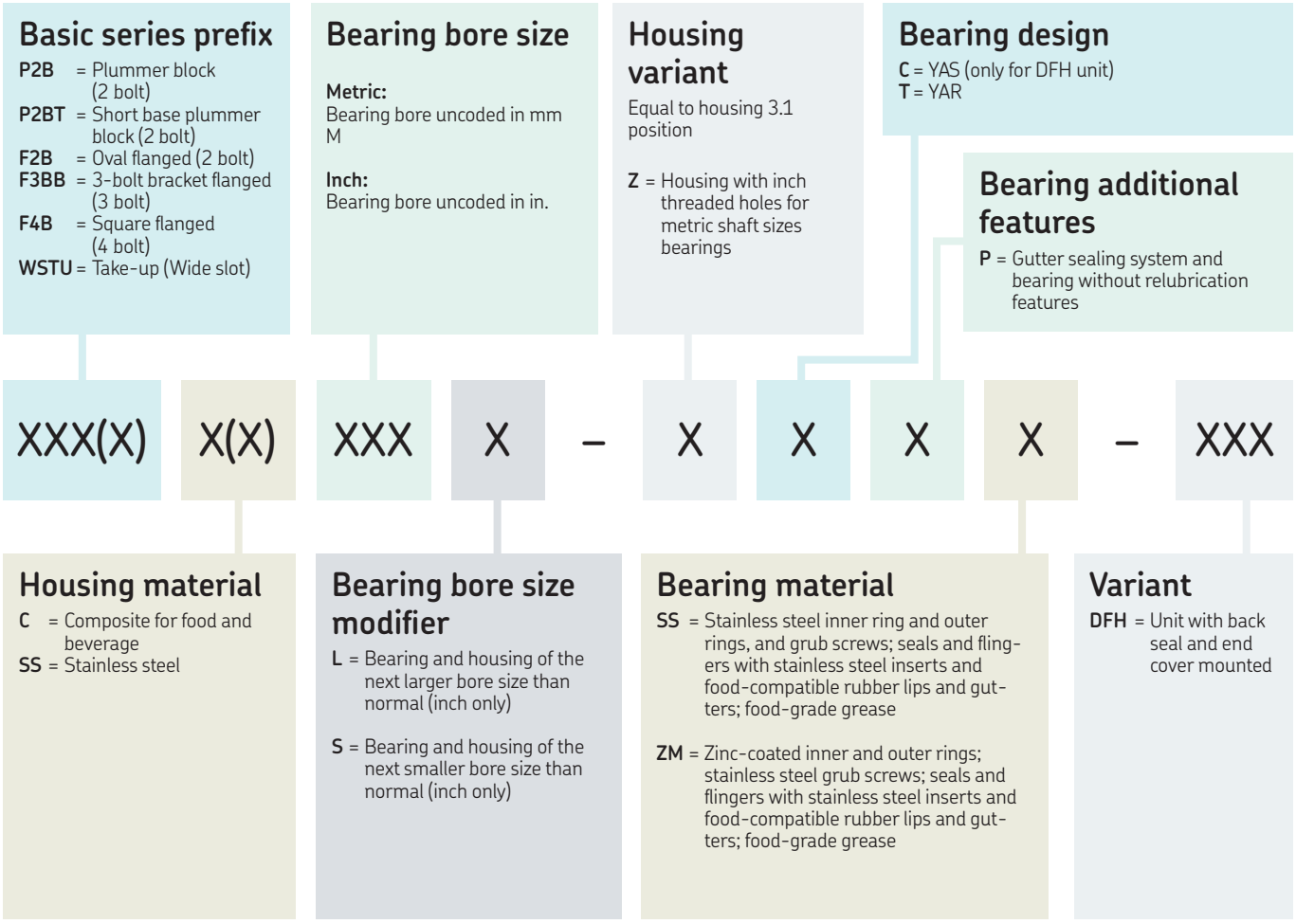

Food and beverages designation rules – Bearings

Main size

1st digit: diameter series

Metric
2nd-3rd digits: bore diameter code

Inch
2nd-3rd digits: bore diameter code of the basic metric bearing

Inch bore diameter (empty for metric bearings)

1st digit: number of whole inches

2nd-3rd digits: sixteenth of an inch

Additional bearing features

W = Bearing without relubrication features

XXX XXX (–XXX) – XXX(X) X / XX

Bearing design

YAR = Insert bearing with grub screws, inner ring extended on both sides
YAS = Insert bearing with grub screws, inner ring extended in one side, specific for DfH units: allows to accommodate the back seal

Sealing system

2LP = Gutter seal and gutter flinger on both sides
2LP1 = Gutter seal on both sides and gutter flinger on one side (locking device side)

Material

SS = Stainless steel inner ring and outer rings, and grub screws; seals and flingers with stainless steel inserts and food-compatible rubber lips and gutters; food-grade grease
ZM = Zinc-coated inner and outer rings; stainless steel grub screws; seals and flingers with stainless steel inserts and food-compatible rubber lips and gutters; food-grade grease



Product tables

1.1 Oval flanged composite and stainless steel ball bearing units, metric shafts 26
1.1 Oval flanged composite and stainless steel ball bearing units, inch shafts 28
1.2 Oval flanged sealed composite ball bearing units (DFH), metric shafts. 32
1.2 Oval flanged sealed composite ball bearing units (DFH), inch shafts. 34
1.3 Square flanged composite and stainless steel ball bearing units, metric shafts . . 36
1.3 Square flanged composite and stainless steel ball bearing units, inch shafts 38
1.4 Square flanged sealed composite ball bearing units (DFH), metric shafts 42
1.4 Square flanged sealed composite ball bearing units (DFH), inch shafts 44
1.5 Plummer block composite and stainless steel ball bearing units, metric shafts . . 46
1.5 Plummer block composite and stainless steel ball bearing units, inch shafts 48
1.6 Plummer block sealed composite ball bearing units (DFH), metric shafts 52
1.6 Plummer block sealed composite ball bearing units (DFH), inch shafts 54
1.7 3-bolt bracket flanged composite ball bearing units, metric shafts. 56
1.7 3-bolt bracket flanged composite ball bearing units, inch shafts 58
1.8 3-bolt bracket flanged sealed composite ball bearing units (DFH), metric shafts 62
1.8 3-bolt bracket flanged sealed composite ball bearing units (DFH), inch shaft . . . 64
1.9 Short base plummer block (tapped base pillow block) composite and stainless steel ball bearing units, metric shafts 66
1.9 Short base plummer block (tapped base pillow block) composite and stainless steel ball bearing units, inch shafts 68
1.10 Short base plummer block (tapped base pillow block) sealed composite ball bearing units (DFH), metric shafts. 72
1.10 Short base plummer block (tapped base pillow block) sealed composite ball bearing units (DFH), inch shafts. 74
1.11 Take-up composite ball bearing units, metric shafts 76
1.11 Take-up composite ball bearing units, inch shafts 78
1.12 Take-up composite sealed ball bearing units (DFH), metric shafts 82
1.12 Take-up composite sealed ball bearing units (DFH), inch shafts 84
1.13 Stainless steel and zinc-coated insert bearings, metric shafts 86
1.13 Stainless steel and zinc-coated insert bearings, metric shafts 87

1.1 Oval flanged composite and stainless steel ball bearing units, metric shafts

d **20 – 50** mm

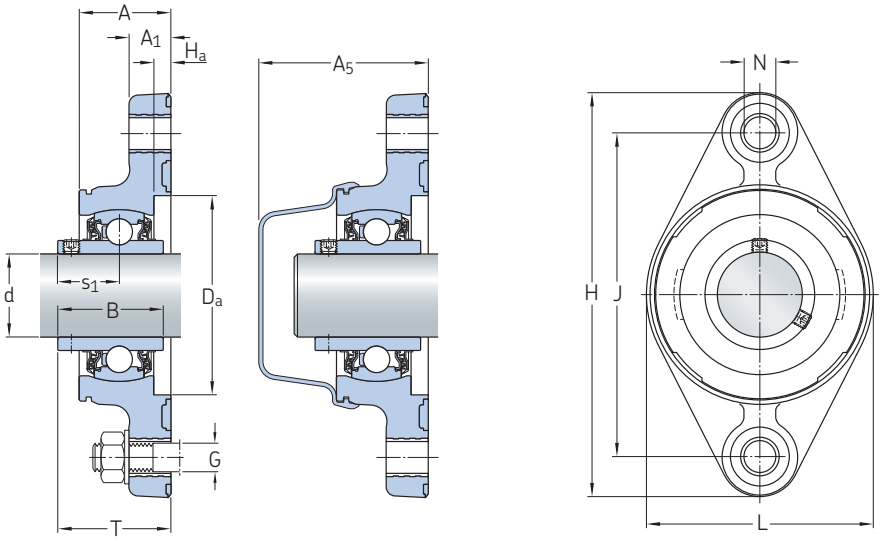

F2BC (composite housing)

Principal dimensions		Basic load ratings dynamic	static	Fatigue load limit	Limiting speed with shaft tolerance h6	Mass	Designations Bearing unit	Associated end cover
d	J	C	C_0	P_u				
mm		kN		kN	r/min	kg	–	
20	90	10,8	6,55	0,28	5 000	0,23	**F2BC 20M-TPSS**	ECB 504
	90	12,7	6,55	0,28	5 000	0,23	**F2BC 20M-TPZM**	ECB 504
	89,7	10,8	6,55	0,28	5 000	0,47	**F2BSS 20M-YTPSS**	ECW 204
25	99	11,9	7,8	0,335	4 300	0,29	**F2BC 25M-TPSS**	ECB 505
	99	14	7,8	0,335	4 300	0,3	**F2BC 25M-TPZM**	ECB 505
	98,8	11,9	7,8	0,335	4 300	0,72	**F2BSS 25M-YTPSS**	ECW 205
30	117	16,3	11,2	0,475	3 800	0,44	**F2BC 30M-TPSS**	ECB 506
	117	19,5	11,2	0,475	3 800	0,44	**F2BC 30M-TPZM**	ECB 506
	116,7	16,3	11,2	0,475	3 800	0,97	**F2BSS 30M-YTPSS**	ECW 206
35	130	21,6	15,3	0,655	3 200	0,63	**F2BC 35M-TPSS**	ECB 507
	130	25,5	15,3	0,655	3 200	0,63	**F2BC 35M-TPZM**	ECB 507
	130,2	21,6	15,3	0,655	3 200	1,35	**F2BSS 35M-YTPSS**	ECW 207
40	144	24,7	19	0,8	2 800	0,8	**F2BC 40M-TPSS**	ECB 508
	144	30,7	19	0,8	2 800	0,8	**F2BC 40M-TPZM**	ECB 508
	143,7	24,7	19	0,8	2 800	1,75	**F2BSS 40M-YTPSS**	ECW 208
50	157	29,6	23,2	0,98	2 200	1	**F2BC 50M-TPSS**	ECB 510
	157	35,1	23,2	0,98	2 200	1	**F2BC 50M-TPZM**	ECB 510

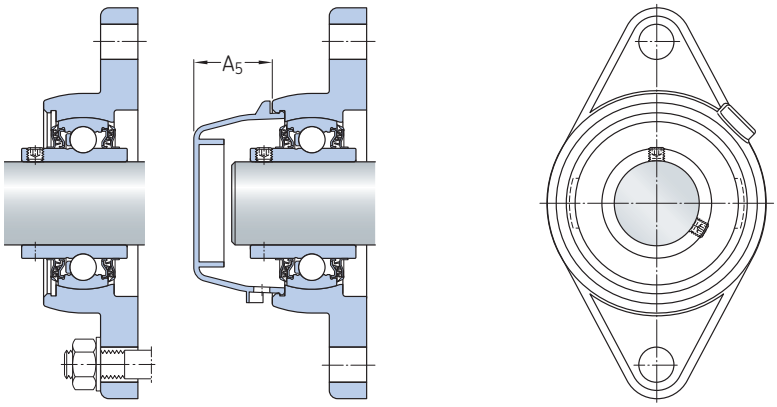

F2BSS (stainless steel housing)

Dimensions

d	A	A_1	A_5	B	D_a	H	H_a	L	N	G	s_1	T
mm												
20	27	17	54,1	31	52	119	6	62	12	10	18,3	35
	27	17	54,1	31	52	119	6	62	12	10	18,3	35
	25,8	11,1	24,5	31	–	111,9	–	60,4	11,1	10	18,3	32,3
25	29	17	55,6	34,1	62	128	6	72	12	10	19,8	37
	29	17	55,6	34,1	62	128	6	72	12	10	19,8	37
	29,4	13,5	24,5	34,1	–	123,8	–	69,9	12,7	10	19,8	36,8
30	33	19	61,1	38,1	72	146	6	82	12	10	22,2	40,9
	33	19	61,1	38,1	72	146	6	82	12	10	22,2	40,9
	34,1	13,5	29	38,1	–	141,3	–	79,4	12,7	10	22,2	42,2
35	36	20	64,6	42,9	82	164	6	92	14	12	25,4	45
	36	20	64,6	42,9	82	164	6	92	14	12	25,4	45,1
	35,7	14,3	30,5	42,9	–	155,6	–	92,1	14,3	12	25,4	46,4
40	38	21	67,9	49,2	88	178	6	98	14	12	30,2	50,9
	38	21	67,9	49,2	88	178	6	98	14	12	30,2	50,9
	38,9	14,3	31,5	49,2	–	171,5	–	101,6	14,3	12	30,2	53,2
50	42	21	74	51,6	98	199	6	107	18	16	32,6	53,8
	42	21	74	51,6	98	199	6	107	18	16	32,6	53,8

1.1 Oval flanged composite and stainless steel ball bearing units, inch shafts

d **3/4 – 1 1/4** in.
19,05 – 31,75 mm

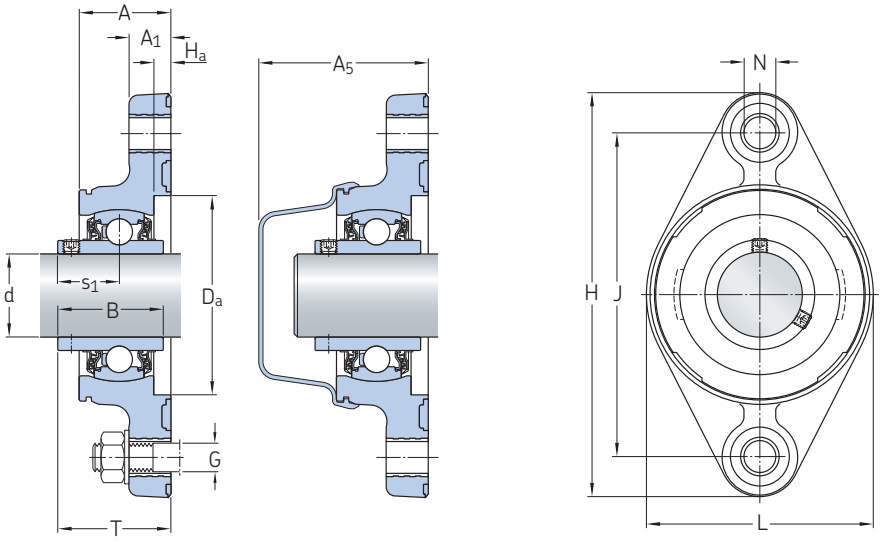

F2BC (composite housing)

Principal dimensions		Basic load ratings dynamic	static	Fatigue load limit	Limiting speed with shaft tolerance h6	Mass	Designations Bearing unit	Associated end cover
d	J	C	C_0	P_u				
in./*mm*		lbf/*kN*		lbf/*kN*	r/min	lb/*kg*	–	
3/4	3.54	2 430	1 470	62.9	5 000	0.53	**F2BC 012-TPSS**	ECB 504
19,05	*90*	*10,8*	*6,55*	*0,28*		*0,24*		
	3.54	2 860	1 470	62.9	5 000	0.51	**F2BC 012-TPZM**	ECB 504
	90	*12,7*	*6,55*	*0,28*		*0,23*		
	3.53	2 430	1 470	62.9	5 000	1.05	**F2BSS 012-YTPSS**	ECW 204
	89,7	*10,8*	*6,55*	*0,28*		*0,48*		
15/16	3.9	3 150	1 750	75.3	4 300	0.68	**F2BC 015-TPZM**	ECB 505
23,813	*99*	*14*	*7,8*	*0,335*		*0,31*		
1	3.9	2 680	1 750	75.3	4 300	0.64	**F2BC 100-TPSS**	ECB 505
25,4	*99*	*11,9*	*7,8*	*0,335*		*0,29*		
	3.9	3 150	1 750	75.3	4 300	0.64	**F2BC 100-TPZM**	ECB 505
	99	*14*	*7,8*	*0,335*		*0,29*		
	3.89	2 680	1 750	75.3	4 300	1.6	**F2BSS 100-YTPSS**	ECW 205
	98,8	*11,9*	*7,8*	*0,335*		*0,72*		
1 3/16	4.61	3 660	2 520	107	3 800	0.97	**F2BC 103-TPSS**	ECB 506
30,163	*117*	*16,3*	*11,2*	*0,475*		*0,44*		
	4.61	4 380	2 520	107	3 800	0.97	**F2BC 103-TPZM**	ECB 506
	117	*19,5*	*11,2*	*0,475*		*0,44*		
	4.59	3 660	2 520	107	3 800	2.15	**F2BSS 103-YTPSS**	ECW 206
	116,7	*16,3*	*11,2*	*0,475*		*0,97*		
1 1/4	4.61	3 660	2 520	107	3 800	0.9	**F2BC 104S-TPSS**	ECB 506
31,75	*117*	*16,3*	*11,2*	*0,475*		*0,41*		
	4.61	4 380	2 520	107	3 800	0.93	**F2BC 104S-TPZM**	ECB 506
	117	*19,5*	*11,2*	*0,475*		*0,42*		
	4.59	3 660	2 520	107	3 800	2.05	**F2BSS 104S-YTPSS**	ECW 206
	116,7	*16,3*	*11,2*	*0,475*		*0,94*		
	5.12	4 860	3 440	147	3 200	1.5	**F2BC 104-TPSS**	ECB 507
	130	*21,6*	*15,3*	*0,655*		*0,69*		
	5.12	5 730	3 440	147	3 200	1.5	**F2BC 104-TPZM**	ECB 507
	130	*25,5*	*15,3*	*0,655*		*0,69*		
	5.13	4 860	3 440	147	3 200	3.1	**F2BSS 104-YTPSS**	ECW 207
	130,2	*21,6*	*15,3*	*0,655*		*1,4*		

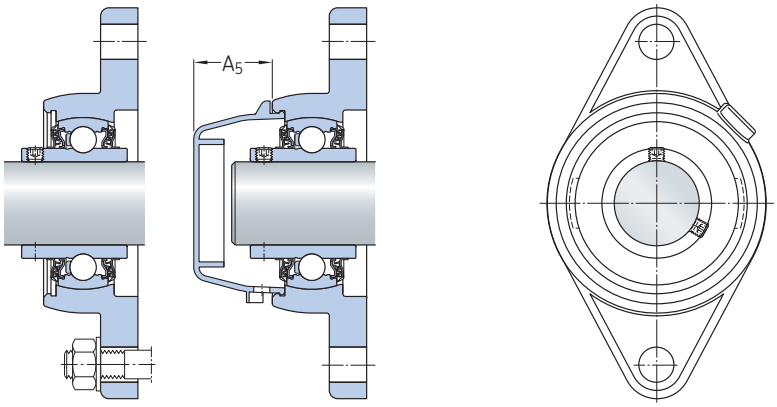

F2BSS (stainless steel housing)

Dimensions

d	A	A_1	A_5	B	D_a	H	H_a	L	N	G	s_1	T
in./*mm*												
3/4	1.06	0.67	2.13	1.22	2.05	4.69	0.24	2.44	0.47	0.375	0.72	1.38
19,05	*27*	*17*	*54,1*	*31*	*52*	*119*	*6*	*62*	*12*	*10*	*18,3*	*35*
	1.06	0.67	2.13	1.22	2.05	4.69	0.24	2.44	0.47	0.375	0.72	1.38
	27	*17*	*54,1*	*31*	*52*	*119*	*6*	*62*	*12*	*10*	*18,3*	*35*
	1.02	0.44	0.96	1.22	–	4.41	–	2.38	0.44	0.375	0.72	1.26
	25,8	*11,1*	*24,5*	*31*	–	*111,9*	–	*60,4*	*11,1*	*10*	*18,3*	*32*
15/16	1.14	0.67	2.19	1.34	2.44	5.04	0.24	2.83	0.47	0.375	0.78	1.46
23,813	*29*	*17*	*55,6*	*34,1*	*62*	*128*	*6*	*72*	*12*	*10*	*19,8*	*37*
1	1.14	0.67	2.19	1.34	2.44	5.04	0.24	2.83	0.47	0.375	0.78	1.46
25,4	*29*	*17*	*55,6*	*34,1*	*62*	*128*	*6*	*72*	*12*	*10*	*19,8*	*37*
	1.14	0.67	2.19	1.34	2.44	5.04	0.24	2.83	0.47	0.375	0.78	1.37
	29	*17*	*55,6*	*34,1*	*62*	*128*	*6*	*72*	*12*	*10*	*19,8*	*34,8*
	1.16	0.53	0.96	1.34	–	4.87	–	2.75	0.5	0.4375	0.78	1.45
	29,4	*13,5*	*24,5*	*34,1*	–	*123,8*	–	*69,9*	*12,7*	*10*	*19,8*	*36,8*
1 3/16	1.3	0.75	2.41	1.5	2.83	5.75	0.24	3.23	0.47	0.375	0.87	1.61
30,163	*33*	*19*	*61,1*	*38,1*	*72*	*146*	*6*	*82*	*12*	*10*	*22,2*	*40,9*
	1.3	0.75	2.41	1.5	2.83	5.75	0.24	3.23	0.47	0.375	0.87	1.61
	33	*19*	*61,1*	*38,1*	*72*	*146*	*6*	*82*	*12*	*10*	*22,2*	*40,9*
	1.34	0.53	1.14	1.5	–	5.56	–	3.13	0.5	0.4375	0.87	1.66
	34,1	*13,5*	*29*	*38,1*	–	*141,3*	–	*79,4*	*12,7*	*10*	*22,2*	*42,2*
1 1/4	1.3	0.75	2.41	1.5	2.83	5.75	0.24	3.23	0.47	0.375	0.87	1.61
31,75	*33*	*19*	*61,1*	*38,1*	*72*	*146*	*6*	*82*	*12*	*10*	*22,2*	*40,9*
	1.3	0.75	2.41	1.5	2.83	5.75	0.24	3.23	0.47	0.375	0.87	1.61
	33	*19*	*61,1*	*38,1*	*72*	*146*	*6*	*82*	*12*	*10*	*22,2*	*40,9*
	1.34	0.53	1.14	1.5	–	5.56	–	3.13	0.5	0.4375	0.87	1.66
	34,1	*13,5*	*29*	*38,1*	–	*141,3*	–	*79,4*	*12,7*	*10*	*22,2*	*42,2*
	1.42	0.79	2.54	1.69	3.23	6.46	0.24	3.62	0.55	0.5	1	1.77
	36	*20*	*64,6*	*42,9*	*82*	*164*	*6*	*92*	*14*	*12*	*25,4*	*45*
	1.42	0.79	2.54	1.69	3.23	6.46	0.24	3.62	0.55	0.5	1	1.78
	36	*20*	*64,6*	*42,9*	*82*	*164*	*6*	*92*	*14*	*12*	*25,4*	*45,1*
	1.41	0.56	1.2	1.69	–	6.13	–	3.63	0.56	0.5	1	1.83
	35,7	*14,3*	*30,5*	*42,9*	–	*155,6*	–	*92,1*	*14,3*	*12*	*25,4*	*46,4*

1.1 Oval flanged composite and stainless steel ball bearing units, inch shafts

d **1 3/8 – 1 15/16** in.
34,925 – 49,213 mm

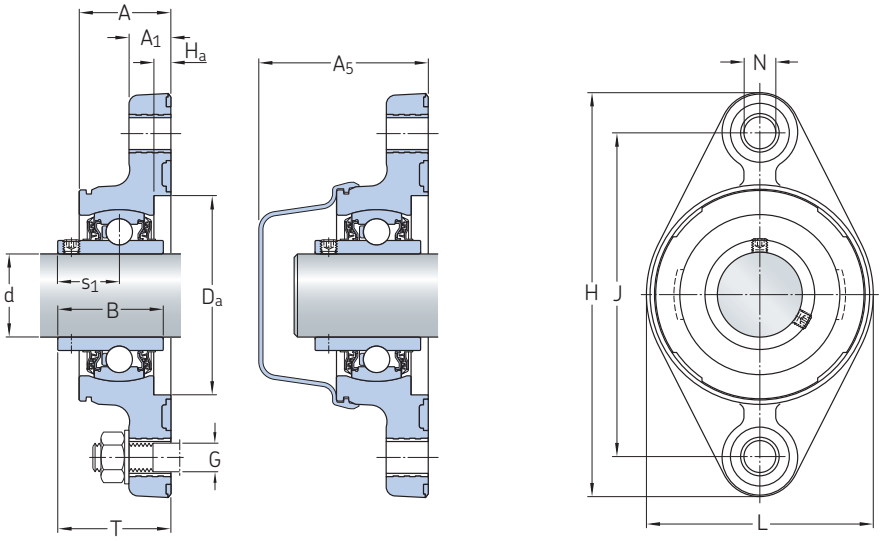

F2BC (composite housing)

Principal dimensions		Basic load ratings dynamic	static	Fatigue load limit	Limiting speed with shaft tolerance h6	Mass	Designations Bearing unit	Associated end cover
d	J	C	C_0	P_u				
in./*mm*		lbf/*kN*		lbf/*kN*	r/min	lb/*kg*	–	
1 3/8	5.12	4 860	3 440	147	3 200	1.4	**F2BC 106-TPSS**	ECB 507
34,925	*130*	*21,6*	*15,3*	*0,655*		*0,63*		
	5.12	5 730	3 440	147	3 200	1.4	**F2BC 106-TPZM**	ECB 507
	130	*25,5*	*15,3*	*0,655*		*0,63*		
	5.13	4 860	3 440	147	3 200	3	**F2BSS 106-YTPSS**	ECW 207
	130,2	*21,6*	*15,3*	*0,655*		*1,35*		
1 7/16	5.12	4 860	3 440	147	3 200	1.3	**F2BC 107-TPSS**	ECB 507
36,513	*130*	*21,6*	*15,3*	*0,655*		*0,6*		
	5.12	5 730	3 440	147	3 200	1.3	**F2BC 107-TPZM**	ECB 507
	130	*25,5*	*15,3*	*0,655*		*0,6*		
	5.13	4 860	3 440	147	3 200	2.9	**F2BSS 107-YTPSS**	ECW 207
	130,2	*21,6*	*15,3*	*0,655*		*1,3*		
1 1/2	5.67	5 550	4 270	180	2 800	1.85	**F2BC 108-TPSS**	ECB 508
38,1	*144*	*24,7*	*19*	*0,8*		*0,84*		
	5.67	6 900	4 270	180	2 800	1.85	**F2BC 108-TPZM**	ECB 508
	144	*30,7*	*19*	*0,8*		*0,84*		
	5.66	5 550	4 270	180	2 800	3.95	**F2BSS 108-YTPSS**	ECW 208
	143,7	*24,7*	*19*	*0,8*		*1,8*		
1 15/16	6.18	6 650	5 220	220	2 200	2.3	**F2BC 115-TPSS**	ECB 510
49,213	*157*	*29,6*	*23,2*	*0,98*		*1,05*		
	6.18	7 890	5 220	220	2 200	2.3	**F2BC 115-TPZM**	ECB 510
	157	*35,1*	*23,2*	*0,98*		*1,05*		

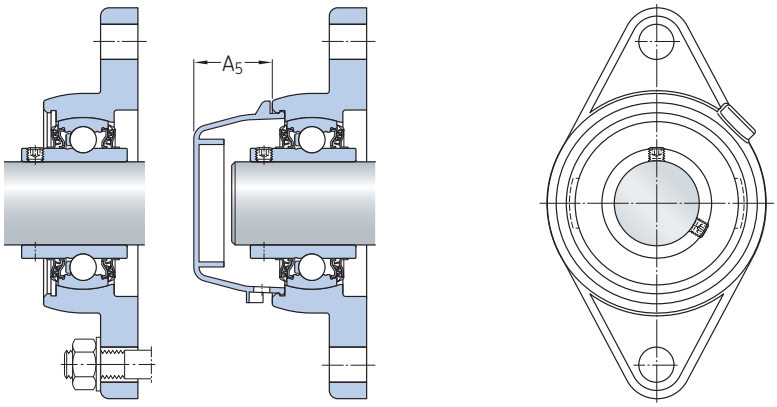

F2BSS (stainless steel housing)

Dimensions

d	A	A_1	A_5	B	D_a	H	H_a	L	N	G	s_1	T
in./*mm*												
1 3/8	1.42	0.79	2.54	1.69	3.23	6.46	0.24	3.62	0.55	0.5	1	1.77
34,925	*36*	*20*	*64,6*	*42,9*	*82*	*164*	*6*	*92*	*14*	*12*	*25,4*	*45*
	1.42	0.79	2.54	1.69	3.23	6.46	0.24	3.62	0.55	0.5	1	1.78
	36	*20*	*64,6*	*42,9*	*82*	*164*	*6*	*92*	*14*	*12*	*25,4*	*45,1*
	1.41	0.56	1.2	1.69	–	6.13	–	3.63	0.56	0.5	1	1.83
	35,7	*14,3*	*30,5*	*42,9*	–	*155,6*	–	*92,1*	*14,3*	*12*	*25,4*	*46,4*
1 7/16	1.42	0.79	2.54	1.69	3.23	6.46	0.24	3.62	0.55	0.5	1	1.77
36,513	*36*	*20*	*64,6*	*42,9*	*82*	*164*	*6*	*92*	*14*	*12*	*25,4*	*45*
	1.42	0.79	2.54	1.69	3.23	6.46	0.24	3.62	0.55	0.5	1	1.78
	36	*20*	*64,6*	*42,9*	*82*	*164*	*6*	*92*	*14*	*12*	*25,4*	*45,1*
	1.41	0.56	1.2	1.69	–	6.13	–	3.63	0.56	0.5	1	1.83
	35,7	*14,3*	*30,5*	*42,9*	–	*155,6*	–	*92,1*	*14,3*	*12*	*25,4*	*46,4*
1 1/2	1.5	0.83	2.67	1.94	3.46	7.01	0.24	3.86	0.55	0.5	1.19	2
38,1	*38*	*21*	*67,9*	*49,2*	*88*	*178*	*6*	*98*	*14*	*12*	*30,2*	*50,9*
	1.5	*0.83*	*2.67*	*1.94*	*3.46*	*7.01*	*0.24*	*3.86*	*0.55*	*0.5*	*1.19*	*2*
	38	*21*	*67,9*	*49,2*	*88*	*178*	*6*	*98*	*14*	*12*	*30,2*	*50,9*
	1.53	0.56	1.24	1.94	–	6.75	–	4	0.56	0.5	1.19	2.09
	38,9	*14,3*	*31,5*	*49,2*	–	*171,5*	–	*101,6*	*14,3*	*12*	*30,2*	*53,2*
1 15/16	1.65	0.83	2.91	2.03	3.86	7.83	0.24	4.21	0.71	0.625	1.28	2.12
49,213	*42*	*21*	*74*	*51,6*	*98*	*199*	*6*	*107*	*18*	*16*	*32,6*	*53,8*
	1.65	0.83	2.91	2.03	3.86	7.83	0.24	4.21	0.71	0.625	1.28	2.12
	42	*21*	*74*	*51,6*	*98*	*199*	*6*	*107*	*18*	*16*	*32,6*	*53,8*

1.2 Oval flanged sealed composite ball bearing units (DFH), metric shafts

d **20 – 50** mm

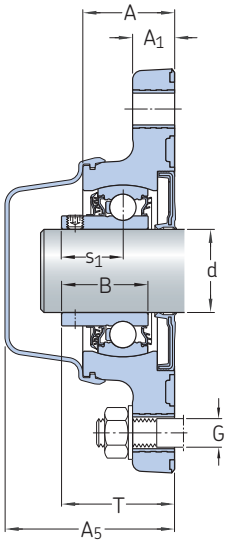

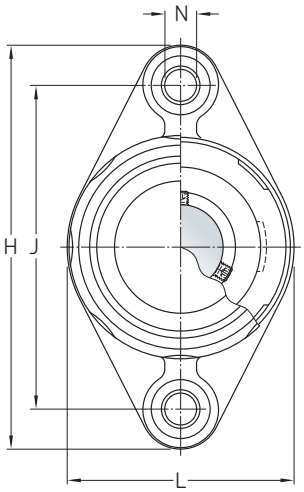

Principal dimensions		Basic load ratings dynamic	static	Fatigue load limit	Limiting speed with shaft tolerance h6	Mass	Designation
d	J	C	C_0	P_u			
mm		kN		kN	r/min	kg	–
20	90	10,8	6,55	0,28	5 000	0,24	**F2BC 20M-CPSS-DFH**
25	99	11,9	7,8	0,335	4 300	0,32	**F2BC 25M-CPSS-DFH**
30	117	16,3	11,2	0,475	3 800	0,46	**F2BC 30M-CPSS-DFH**
35	130	21,6	15,3	0,655	3 200	0,65	**F2BC 35M-CPSS-DFH**
40	144	24,7	19	0,8	2 800	0,81	**F2BC 40M-CPSS-DFH**
50	157	29,6	23,2	0,98	2 200	1,05	**F2BC 50M-CPSS-DFH**

Dimensions

d	A	A_1	A_5	B	H	L	N	G	s_1	T
in./*mm*										
20	27	17	54,1	25,3	119	62	12	10	18,3	33,3
25	29	17	55,6	27,3	128	72	12	10	19,8	34,8
30	33	19	61,1	31,2	146	82	12	10	22,2	37,2
35	36	20	64,6	34,9	164	92	14	12	25,4	42,4
40	38	21	67,9	40,7	178	98	14	12	30,2	47,2
50	42	21	74	43,6	199	107	18	16	32,6	51,6

1.2 Oval flanged sealed composite ball bearing units (DFH), inch shafts

d **3/4 – 1 15/16** in.
19,05 – 49,213 mm

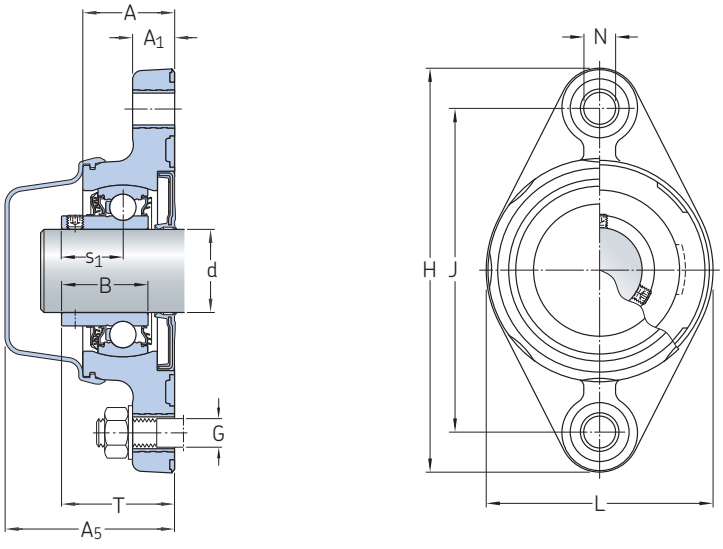

Principal dimensions		Basic load ratings dynamic	static	Fatigue load limit	Limiting speed with shaft tolerance h6	Mass	Designation
d	J	C	C_0	P_u			
in./*mm*		lbf/*kN*		lbf/*kN*	r/min	lb/*kg*	–
3/4	3.54	2 430	1 470	62.9	5 000	0.55	**F2BC 012-CPSS-DFH**
19,05	*90*	*10,8*	*6,55*	*0,28*		*0,25*	
1	3.9	2 680	1 750	75.3	4 300	0.68	**F2BC 100-CPSS-DFH**
25,4	*99*	*11,9*	*7,8*	*0,335*		*0,31*	
1 3/16	4.61	3 660	2 520	106.8	3 800	1	**F2BC 103-CPSS-DFH**
30,163	*117*	*16,3*	*11,2*	*0,475*		*0,46*	
1 1/4	4.61	3 660	2 520	106.8	3 800	0.96	**F2BC 104S-CPSS-DFH**
31,75	*117*	*16,3*	*11,2*	*0,475*		*0,44*	
	5.12	4 860	3 440	147.2	3 200	1.55	**F2BC 104-CPSS-DFH**
	130	*21,6*	*15,3*	*0,655*		*0,7*	
1 3/8	5.12	4 860	3 440	147.2	3 200	1.45	**F2BC 106-CPSS-DFH**
34,925	*130*	*21,6*	*15,3*	*0,655*		*0,65*	
1 7/16	5.12	4 860	3 440	147.2	3 200	1.4	**F2BC 107-CPSS-DFH**
36,513	*130*	*21,6*	*15,3*	*0,655*		*0,63*	
1 1/2	5.67	5 550	4 270	179.8	2 800	1.9	**F2BC 108-CPSS-DFH**
38,1	*144*	*24,7*	*19*	*0,8*		*0,85*	
1 15/16	6.18	6 650	5 220	220.3	2 200	2.3	**F2BC 115-CPSS-DFH**
49,213	*157*	*29,6*	*23,2*	*0,98*		*1,05*	

Dimensions

d	A	A_1	A_5	B	H	L	N	G	s_1	T
in./*mm*										
3/4 *19,05*	1.06 *27*	0.67 *17*	2.13 *54,1*	1 *25,3*	4.69 *119*	2.44 *62*	0.47 *12*	0.375 *10*	0.72 *18,3*	1.31 *33,3*
1 *25,4*	1.14 *29*	0.67 *17*	2.19 *55,6*	1.07 *27,3*	5.04 *128*	2.83 *72*	0.47 *12*	0.375 *10*	0.78 *19,8*	1.37 *34,8*
1 3/16 *30,163*	1.3 *33*	0.75 *19*	2.41 *61,1*	1.23 *31,2*	5.75 *146*	3.23 *82*	0.47 *12*	0.375 *10*	0.87 *22,2*	1.46 *37,2*
1 1/4 *31,75*	1.3 *33* 1.42 *36*	0.75 *19* 0.79 *20*	2.41 *61,1* 2.54 *64,6*	1.23 *31,2* 1.37 *34,9*	5.75 *146* 6.46 *164*	3.23 *82* 3.62 *92*	0.47 *12* 0.55 *14*	0.375 *10* 0.5 *12,7*	0.87 *22,2* 1 *25,4*	1.46 *37,2* 1.67 *42,4*
1 3/8 *34,925*	1.42 *36*	0.79 *20*	2.54 *64,6*	1.37 *34,9*	6.46 *164*	3.62 *92*	0.55 *14*	0.5 *12*	1 *25,4*	1.67 *42,4*
1 7/16 *36,513*	1.42 *36*	0.79 *20*	2.54 *64,6*	1.37 *34,9*	6.46 *164*	3.62 *92*	0.55 *14*	0.5 *12*	1 *25,4*	1.67 *42,4*
1 1/2 *38,1*	1.5 *38*	0.83 *21*	2.67 *67,9*	1.6 *40,7*	7.01 *178*	3.86 *98*	0.55 *14*	0.5 *12*	1.19 *30,2*	1.07 *27,2*
1 15/16 *49,213*	1.65 *42*	0.83 *21*	2.91 *74*	1.72 *43,6*	7.83 *199*	4.21 *107*	0.71 *18*	0.625 *16*	1.28 *32,6*	2.03 *51,6*

1.3 Square flanged composite and stainless steel ball bearing units, metric shafts

d **20 – 50** mm

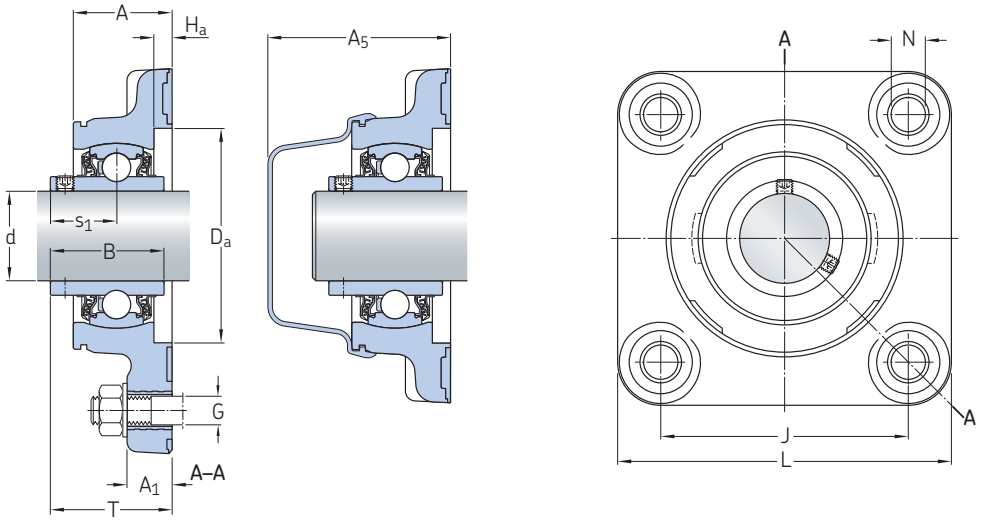

F4BC (composite housing)

Principal dimensions		Basic load ratings dynamic	static	Fatigue load limit	Limiting speed with shaft tolerance h6	Mass	Designations Bearing unit	Associated end cover
d	J	C	C_0	P_u				
mm		kN		kN	r/min	kg	–	
20	63,5	10,8	6,55	0,28	5 000	0,29	**F4BC 20M-TPSS**	ECB 504
	63,5	12,7	6,55	0,28	5 000	0,29	**F4BC 20M-TPZM**	ECB 504
	63,5	10,8	6,55	0,28	5 000	0,68	**F4BSS 20M-YTPSS**	ECW 204
25	70	11,9	7,8	0,335	4 300	0,35	**F4BC 25M-TPSS**	ECB 505
	70	14	7,8	0,335	4 300	0,36	**F4BC 25M-TPZM**	ECB 505
	69,9	11,9	7,8	0,335	4 300	1,05	**F4BSS 25M-YTPSS**	ECW 205
30	83	16,3	11,2	0,475	3 800	0,52	**F4BC 30M-TPSS**	ECB 506
	83	19,5	11,2	0,475	3 800	0,52	**F4BC 30M-TPZM**	ECB 506
	82,6	16,3	11,2	0,475	3 800	1,4	**F4BSS 30M-YTPSS**	ECW 206
35	92	21,6	15,3	0,655	3 200	0,74	**F4BC 35M-TPSS**	ECB 507
	92	25,5	15,3	0,655	3 200	0,74	**F4BC 35M-TPZM**	ECB 507
	92,1	21,6	15,3	0,655	3 200	1,8	**F4BSS 35M-YTPSS**	ECW 207
	102	24,7	19	0,8	2 800	0,93	**F4BC 40M-TPSS**	ECB 508
	102	30,7	19	0,8	2 800	0,93	**F4BC 40M-TPZM**	ECB 508
40	101,6	24,7	19	0,8	2 800	2,3	**F4BSS 40M-YTPSS**	ECW 208
50	111	29,6	23,2	0,98	2 200	1,2	**F4BC 50M-TPSS**	ECB 510
	111	35,1	23,2	0,98	2 200	1,2	**F4BC 50M-TPZM**	ECB 510

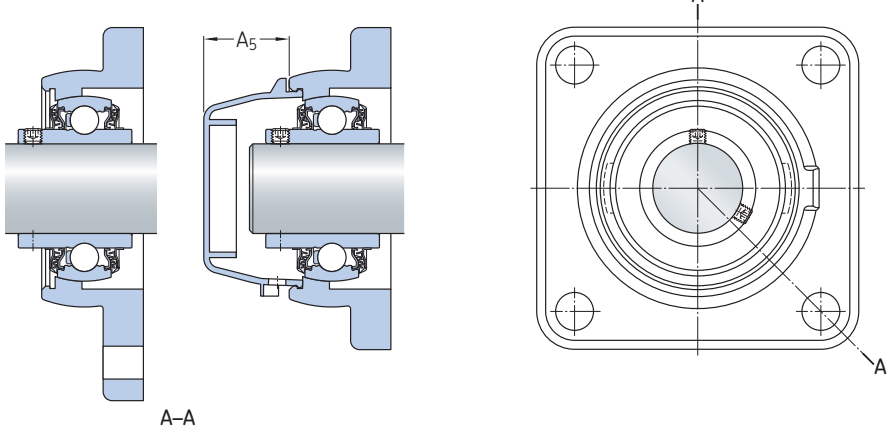

F4BSS (stainless steel housing)

Dimensions

d	A	A_1	A_5	B	D_a	H_a	L	N	G	s_1	T
in./*mm*											
20	27	15	54,1	31	52	6	92	12	10	18,3	34,8
	27	15	54,1	31	52	6	92	12	10	18,3	34,8
	25,8	11,1	24,5	31	–	–	85,7	11,1	10	18,3	32,6
25	29	15	55,6	34,1	62	6	99	12	10	19,8	36,8
	29	15	55,6	34,1	62	6	99	12	10	19,8	36,8
	29,4	13,5	24,5	34,1	–	–	95,3	11,5	10	19,8	36,5
30	33	15	61,1	38,1	72	6	112	12	10	22,2	40,7
	33	15	61,1	38,1	72	6	112	12	10	22,2	40,7
	34,1	13,5	29	38,1	–	–	108	12,7	10	22,2	42
35	36	17	64,6	42,9	82	6	125	14	12	25,4	44,9
	36	17	64,6	42,9	82	6	125	14	12	25,4	44,9
	35,7	14,3	30,5	42,9	–	–	117,5	14,3	12	25,4	46
40	38	17	67,9	49,2	88	6	135	14	12	30,2	50,7
	38	17	67,9	49,2	88	6	135	14	12	30,2	50,7
	38,9	14,3	31,5	49,2	–	–	130,2	14,3	12	30,2	53,2
50	42	19	74	51,6	98	6	153	18	16	32,6	53,6
	42	19	74	51,6	98	6	153	18	16	32,6	53,6

1.3 Square flanged composite and stainless steel ball bearing units, inch shafts

d **3/4 – 1 1/4** in.
19,05 – 31,75 mm

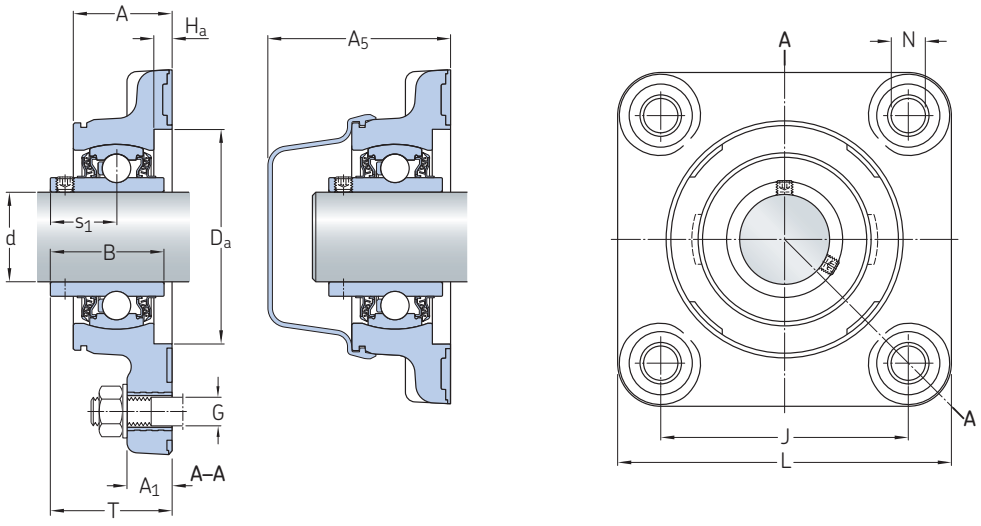

F4BC (composite housing)

Principal dimensions		Basic load ratings dynamic	static	Fatigue load limit	Limiting speed with shaft tolerance h6	Mass	Designations Bearing unit	Associated end cover
d	J	C	C_0	P_u				
in./*mm*		lbf/*kN*		lbf/*kN*	r/min	lb/*kg*	–	
3/4	2.5	2 430	1 470	62.9	5 000	0.66	**F4BC 012-TPSS**	ECB 504
19,05	*63,5*	*10,8*	*6,55*	*0,28*		*0,3*		
	2.5	2 860	1 470	62.9	5 000	0.66	**F4BC 012-TPZM**	ECB 504
	63,5	*12,7*	*6,55*	*0,28*		*0,3*		
	2.5	2 430	1 470	62.9	5 000	1.5	**F4BSS 012-YTPSS**	ECW 204
	63,5	*10,8*	*6,55*	*0,28*		*0,69*		
15/16	2.76	3 150	1 750	75.3	4 300	0.82	**F4BC 015-TPZM**	ECB 505
23,813	*70*	*14*	*7,8*	*0,335*		*0,37*		
1	2.76	2 680	1 750	75.3	4 300	0.77	**F4BC 100-TPSS**	ECB 505
25,4	*70*	*11,9*	*7,8*	*0,335*		*0,35*		
	2.76	3 150	1 750	75.3	4 300	0.77	**F4BC 100-TPZM**	ECB 505
	70	*14*	*7,8*	*0,335*		*0,35*		
	2.75	2 680	1 750	75.3	4 300	2.25	**F4BSS 100-YTPSS**	ECW 205
	69,9	*11,9*	*7,8*	*0,335*		*1,05*		
1 3/16	3.27	3 660	2 520	107	3 800	1.15	**F4BC 103-TPSS**	ECB 506
30,163	*83*	*16,3*	*11,2*	*0,475*		*0,52*		
	3.27	4 380	2 520	107	3 800	1.15	**F4BC 103-TPZM**	ECB 506
	83	*19,5*	*11,2*	*0,475*		*0,52*		
	3.25	3 660	2 520	107	3 800	3.1	**F4BSS 103-YTPSS**	ECW 206
	82,6	*16,3*	*11,2*	*0,475*		*1,4*		
1 1/4	3.27	3 660	2 520	107	3 800	1.1	**F4BC 104S-TPSS**	ECB 506
31,75	*83*	*16,3*	*11,2*	*0,475*		*0,49*		
	3.27	*4 380*	*2 520*	*107*	*3 800*	*1.1*	**F4BC 104S-TPZM**	ECB 506
	83	*19,5*	*11,2*	*0,475*		*0,49*		
	3.25	3 660	2 520	107	3 800	3.05	**F4BSS 104S-YTPSS**	ECW 206
	82,6	*16,3*	*11,2*	*0,475*		*1,4*		
	3.62	4 860	3 440	147	3 200	1.75	**F4BC 104-TPSS**	ECB 507
	92	*21,6*	*15,3*	*0,655*		*0,8*		
	3.62	5 730	3 440	147	3 200	1.75	**F4BC 104-TPZM**	ECB 507
	92	*25,5*	*15,3*	*0,655*		*0,8*		
	3.63	4 860	3 440	147	3 200	4.1	**F4BSS 104-YTPSS**	ECW 207
	92,1	*21,6*	*15,3*	*0,655*		*1,85*		

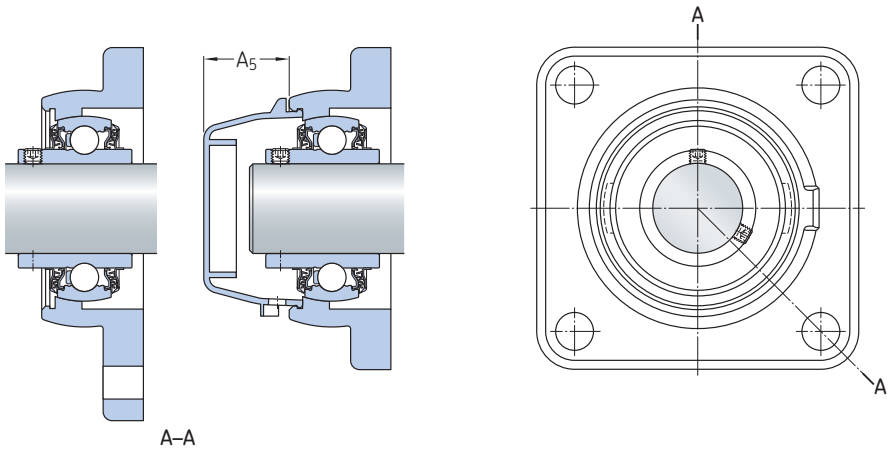

F4BSS (stainless steel housing)

Dimensions

d	A	A_1	A_5	B	D_a	H_a	L	N	G	s_1	T
in./*mm*											
3/4	1.06	0.59	2.13	1.22	2.05	0.24	3.62	0.47	0.375	0.72	1.37
19,05	*27*	*15*	*54,1*	*31*	*52*	*6*	*92*	*12*	*10*	*18,3*	*34,8*
	1.06	0.59	2.13	1.22	2.05	0.24	3.62	0.47	0.375	0.72	1.37
	27	*15*	*54,1*	*31*	*52*	*6*	*92*	*12*	*10*	*18,3*	*34,8*
	1.02	0.44	0.96	1.22	–	–	3.37	0.44	0.375	0.72	1.28
	25,8	*11,1*	*24,5*	*31*	–	–	*85,7*	*11,1*	*10*	*18,3*	*32,6*
15/16	1.14	0.59	2.19	1.34	2.44	0.24	3.9	0.47	0.375	0.78	1.45
23,813	*29*	*15*	*55,6*	*34,1*	*62*	*6*	*99*	*12*	*10*	*19,8*	*36,8*
1	1.14	0.59	2.19	1.34	2.44	0.24	3.9	0.47	0.375	0.78	1.45
25,4	*29*	*15*	*55,6*	*34,1*	*62*	*6*	*99*	*12*	*10*	*19,8*	*36,8*
	1.14	0.59	2.19	1.34	2.44	0.24	3.9	0.47	0.375	0.78	1.45
	29	*15*	*55,6*	*34,1*	*62*	*6*	*99*	*12*	*10*	*19,8*	*36,8*
	1.16	0.53	0.96	1.34	–	–	3.75	0.45	0.4375	0.78	1.44
	29,4	*13,5*	*24,5*	*34,1*	–	–	*95,3*	*11,5*	*10*	*19,8*	*36,5*
1 3/16	1.3	0.59	2.41	1.5	2.83	0.24	4.41	0.47	0.375	0.87	1.6
30,163	*33*	*15*	*61,1*	*38,1*	*72*	*6*	*112*	*12*	*10*	*22,2*	*40,7*
	1.3	0.59	2.41	1.5	2.83	0.24	4.41	0.47	0.375	0.87	1.6
	33	*15*	*61,1*	*38,1*	*72*	*6*	*112*	*12*	*10*	*22,2*	*40,7*
	1.34	0.53	1.14	1.5	–	–	4.25	0.5	0.4375	0.87	1.65
	34,1	*13,5*	*29*	*38,1*	–	–	*108*	*12,7*	*10*	*22,2*	*42*
1 1/4	1.3	0.59	2.41	1.5	2.83	0.24	4.41	0.47	0.375	0.87	1.6
31,75	*33*	*15*	*61,1*	*38,1*	*72*	*6*	*112*	*12*	*10*	*22,2*	*40,7*
	1.3	0.59	2.41	1.5	2.83	0.24	4.41	0.47	0.375	0.87	1.6
	33	*15*	*61,1*	*38,1*	*72*	*6*	*112*	*12*	*10*	*22,2*	*40,7*
	1.34	0.53	1.14	1.5	–	–	4.25	0.5	0.4375	0.87	1.65
	34,1	*13,5*	*29*	*38,1*	–	–	*108*	*12,7*	*10*	*22,2*	*42*
	1.42	0.67	2.54	1.69	3.23	0.24	4.92	0.55	0.5	1	1.77
	36	*17*	*64,6*	*42,9*	*82*	*6*	*125*	*14*	*12*	*25,4*	*44,9*
	1.42	0.67	2.54	1.69	3.23	0.24	4.92	0.55	0.5	1	1.77
	36	*17*	*64,6*	*42,9*	*82*	*6*	*125*	*14*	*12*	*25,4*	*44,9*
	1.41	0.56	1.2	1.69	–	–	4.63	0.56	0.5	1	1.81
	35,7	*14,3*	*30,5*	*42,9*	–	–	*117,5*	*14,3*	*12*	*25,4*	*46*

1.3 Square flanged composite and stainless steel ball bearing units, inch shafts

d **1 3/8 – 1 15/16** in.
34,925 – 49,213 mm

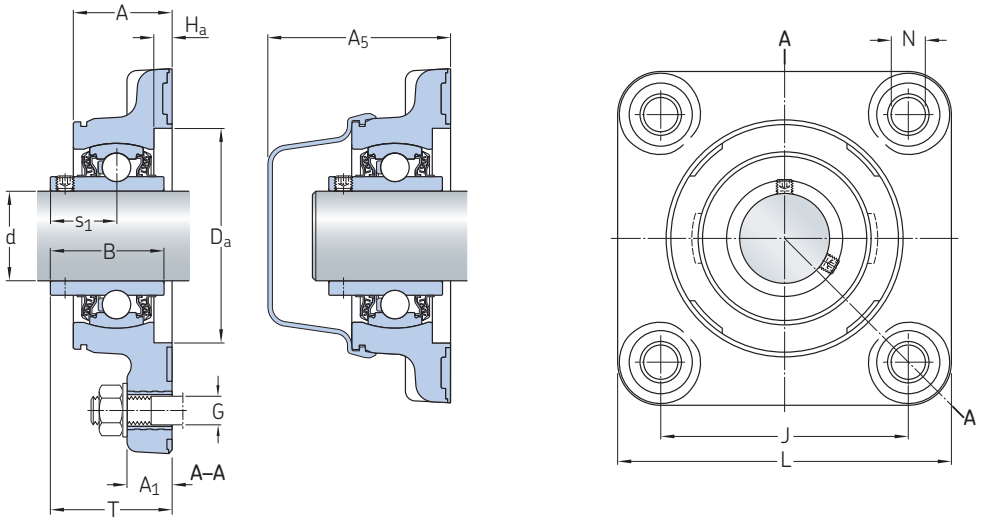

F4BC (composite housing)

Principal dimensions		Basic load ratings dynamic	static	Fatigue load limit	Limiting speed with shaft tolerance h6	Mass	Designations Bearing unit	Associated end cover
d	J	C	C_0	P_u				
in./*mm*		lbf/*kN*		lbf/*kN*	r/min	lb/*kg*	–	
1 3/8	3.62	4 860	3 440	147	3 200	1.65	**F4BC 106-TPSS**	ECB 507
34,925	*92*	*21,6*	*15,3*	*0,655*		*0,74*		
	3.62	5 730	3 440	147	3 200	1.65	**F4BC 106-TPZM**	ECB 507
	92	*25,5*	*15,3*	*0,655*		*0,74*		
	3.63	4 860	3 440	147	3 200	3.95	**F4BSS 106-YTPSS**	ECW 207
	92,1	*21,6*	*15,3*	*0,655*		*1,8*		
1 7/16	3.62	4 860	3 440	147	3 200	1.55	**F4BC 107-TPSS**	ECB 507
36,513	*92*	*21,6*	*15,3*	*0,655*		*0,71*		
	3.62	5 730	3 440	147	3 200	1.55	**F4BC 107-TPZM**	ECB 507
	92	*25,5*	*15,3*	*0,655*		*0,71*		
	3.63	4 860	3 440	147	3 200	3.9	**F4BSS 107-YTPSS**	ECW 207
	92,1	*21,6*	*15,3*	*0,655*		*1,75*		
1 1/2	4.02	5 550	4 270	180	2 800	2.15	**F4BC 108-TPSS**	ECB 508
38,1	*102*	*24,7*	*19*	*0,8*		*0,97*		
	4.02	6 900	4 270	180	2 800	2.15	**F4BC 108-TPZM**	ECB 508
	102	*30,7*	*19*	*0,8*		*0,97*		
	4	5 550	4 270	180	2 800	5.2	**F4BSS 108-YTPSS**	ECW 208
	101,6	*24,7*	*19*	*0,8*		*2,35*		
1 15/16	4.37	6 650	5 220	220	2 200	2.7	**F4BC 115-TPSS**	ECB 510
49,213	*111*	*29,6*	*23,2*	*0,98*		*1,25*		
	4.37	7 890	5 220	220	2 200	2.75	**F4BC 115-TPZM**	ECB 510
	111	*35,1*	*23,2*	*0,98*		*1,25*		

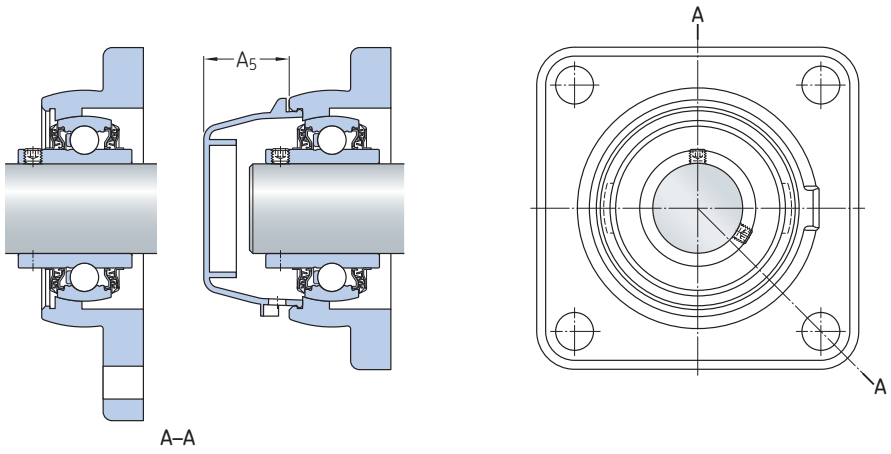

F4BSS (stainless steel housing)

Dimensions

d	A	A_1	A_5	B	D_a	H_a	L	N	G	s_1	T
in./*mm*											
1 3/8	1.42	0.67	2.54	1.69	3.23	0.24	4.92	0.55	0.5	1	1.77
34,925	*36*	*17*	*64,6*	*42,9*	*82*	*6*	*125*	*14*	*12*	*25,4*	*44,9*
	1.42	0.67	2.54	1.69	3.23	0.24	4.92	0.55	0.5	1	1.77
	36	*17*	*64,6*	*42,9*	*82*	*6*	*125*	*14*	*12*	*25,4*	*44,9*
	1.41	0.56	1.2	1.69	–	–	4.63	0.56	0.5	1	1.81
	35,7	*14,3*	*30,5*	*42,9*	–	–	*117,5*	*14,3*	*12*	*25,4*	*46*
1 7/16	1.42	0.67	2.54	1.69	3.23	0.24	4.92	0.55	0.5	1	1.77
36,513	*36*	*17*	*64,6*	*42,9*	*82*	*6*	*125*	*14*	*12*	*25,4*	*44,9*
	1.42	0.67	2.54	1.69	3.23	0.24	4.92	0.55	0.5	1	1.77
	36	*17*	*64,6*	*42,9*	*82*	*6*	*125*	*14*	*12*	*25,4*	*44,9*
	1.41	0.56	1.2	1.69	–	–	4.63	0.56	0.5	1	1.81
	35,7	*14,3*	*30,5*	*42,9*	–	–	*117,5*	*14,3*	*12*	*25,4*	*46*
1 1/2	1.5	0.67	2.67	1.94	3.46	0.24	5.31	0.55	0.5	1.19	2
38,1	*38*	*17*	*67,9*	*49,2*	*88*	*6*	*135*	*14*	*12*	*30,2*	*50,7*
	1.5	0.67	2.67	1.94	3.46	0.24	5.31	0.55	0.5	1.19	2
	38	*17*	*67,9*	*49,2*	*88*	*6*	*135*	*14*	*12*	*30,2*	*50,7*
	1.53	0.56	1.24	1.94	–	–	5.13	0.56	0.5	1.19	2.09
	38,9	*14,3*	*31,5*	*49,2*	–	–	*130,2*	*14,3*	*12*	*30,2*	*53,2*
1 15/16	1.65	0.75	2.91	2.03	3.86	0.24	6.02	0.71	0.625	1.28	2.11
49,213	*42*	*19*	*74*	*51,6*	*98*	*6*	*153*	*18*	*16*	*32,6*	*53,6*
	1.65	0.75	2.91	2.03	3.86	0.24	6.02	0.71	0.625	1.28	2.11
	42	*19*	*74*	*51,6*	*98*	*6*	*153*	*18*	*16*	*32,6*	*53,6*

1.4 Square flanged sealed composite ball bearing units (DFH), metric shafts

d **20 – 50** mm

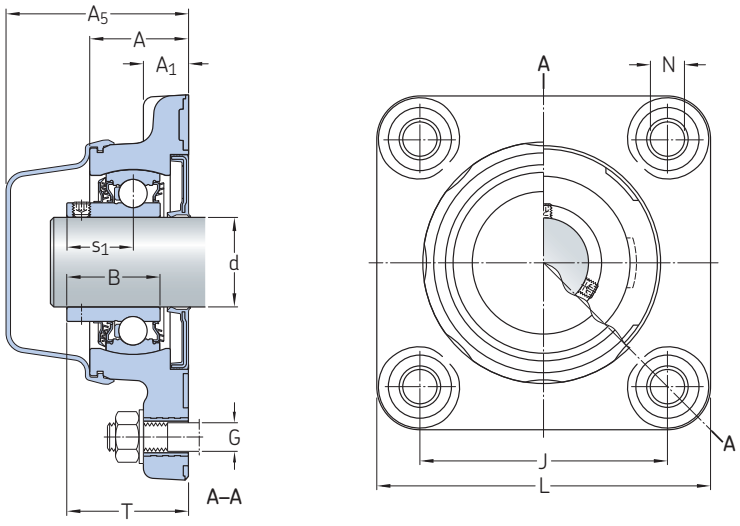

Principal dimensions		Basic load ratings dynamic	static	Fatigue load limit	Limiting speed with shaft tolerance h6	Mass	Designation
d	J	C	C_0	P_u			
mm		kN		kN	r/min	kg	–
20	63,5	10,8	6,55	0,28	5 000	0,3	**F4BC 20M-CPSS-DFH**
25	70	11,9	7,8	0,335	4 300	0,38	**F4BC 25M-CPSS-DFH**
30	83	16,3	11,2	0,475	3 800	0,54	**F4BC 30M-CPSS-DFH**
35	92	21,6	15,3	0,655	3 200	0,76	**F4BC 35M-CPSS-DFH**
40	102	24,7	19	0,8	2 800	0,94	**F4BC 40M-CPSS-DFH**
50	111	29,6	23,2	0,98	2 200	1,2	**F4BC 50M-CPSS-DFH**

Dimensions

d	A	A_1	A_5	B	L	N	G	s_1	T
mm									
20	27	15	54,1	25,3	92	12	10	18,3	35,3
25	29	15	55,6	27,3	99	12	10	19,8	36,8
30	33	15	61,1	31,2	112	12	10	22,2	41,2
35	36	17	64,6	34,9	125	14	12	25,4	45,4
40	38	17	67,9	40,7	135	14	12	30,2	51,2
50	42	19	74	43,6	153	18	16	32,6	53,6

1.4 Square flanged sealed composite ball bearing units (DFH), inch shafts

d **3/4 – 1 15/16** in.
19,05 – 49,213 mm

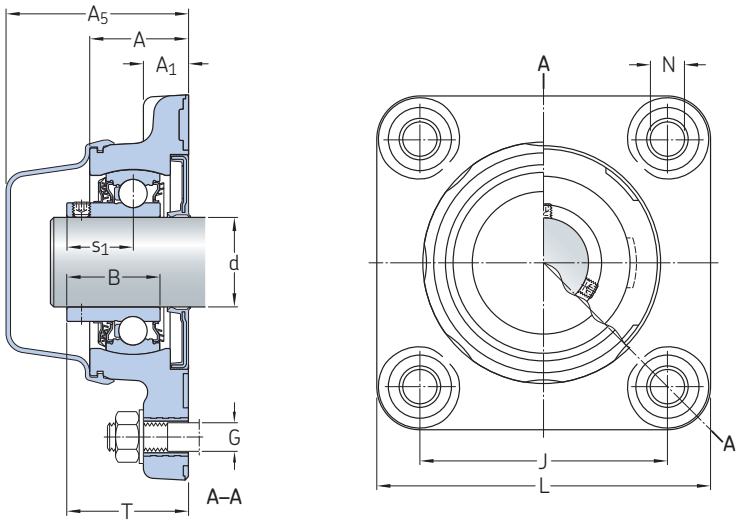

Principal dimensions		Basic load ratings dynamic	static	Fatigue load limit	Limiting speed with shaft tolerance h6	Mass	Designation
d	J	C	C_0	P_u			
in./*mm*		lbf/*kN*		lbf/*kN*	r/min	lb/*kg*	–
3/4	2.5	2 430	1 470	62.9	5 000	0.69	**F4BC 012-CPSS-DFH**
19,05	*63,5*	*10,8*	*6,55*	*0,28*		*0,31*	
1	2.76	2 680	1 750	75.3	4 300	0.81	**F4BC 100-CPSS-DFH**
25,4	*70*	*11,9*	*7,8*	*0,335*		*0,37*	
1 3/16	3.27	3 660	2 520	107	3 800	1.2	**F4BC 103-CPSS-DFH**
30,163	*83*	*16,3*	*11,2*	*0,475*		*0,54*	
1 1/4	3.27	3 660	2 520	107	3 800	1.15	**F4BC 104S-CPSS-DFH**
31,75	*83*	*16,3*	*11,2*	*0,475*		*0,52*	
	3.62	4 860	3 440	147	3 200	1.8	**F4BC 104-CPSS-DFH**
	92	*21,6*	*15,3*	*0,655*		*0,81*	
1 3/8	3.62	4 860	3 440	147	3 200	1.65	**F4BC 106-CPSS-DFH**
34,925	*92*	*21,6*	*15,3*	*0,655*		*0,76*	
1 7/16	3.62	4 860	3 440	147	3 200	1.6	**F4BC 107-CPSS-DFH**
36,513	*92*	*21,6*	*15,3*	*0,655*		*0,74*	
1 1/2	4.02	5 550	4 270	180	2 800	2.15	**F4BC 108-CPSS-DFH**
38,1	*102*	*24,7*	*19*	*0,8*		*0,98*	
1 15/16	4.37	6 650	5 220	220	2 200	2.75	**F4BC 115-CPSS-DFH**
49,213	*111*	*29,6*	*23,2*	*0,98*		*1,25*	

Dimensions

d	A	A_1	A_5	B	L	N	G	s_1	T
in./*mm*									
3/4 *19,05*	1.06 *27*	0.59 *15*	2.13 *54,1*	1 *25,3*	3.62 *92*	0.47 *12*	0.375 *10*	0.72 *18,3*	1.39 *35,3*
1 *25,4*	1.14 *29*	0.59 *15*	2.19 *55,6*	1.07 *27,3*	3.9 *99*	0.47 *12*	0.375 *10*	0.78 *19,8*	1.45 *36,8*
1 3/16 *30,163*	1.3 *33*	0.59 *15*	2.41 *61,1*	1.23 *31,2*	4.41 *112*	0.47 *12*	0.375 *10*	0.87 *22,2*	1.62 *41,2*
1 1/4 *31,75*	1.3 *33* 1.42 *36*	0.59 *15* 0.67 *17*	2.41 *61,1* 2.54 *64,6*	1.23 *31,2* 1.37 *34,9*	4.41 *112* 4.92 *125*	0.47 *12* 0.55 *14*	0.375 *10* 0.5 *12*	0.87 *22,2* 1 *25,4*	1.62 *41,2* 1.79 *45,4*
1 3/8 *34,925*	1.42 *36*	0.67 *17*	2.54 *64,6*	1.37 *34,9*	4.92 *125*	0.55 *14*	0.5 *12*	1 *25,4*	1.79 *45,4*
1 7/16 *36,513*	1.42 *36*	0.67 *17*	2.54 *64,6*	1.37 *34,9*	4.92 *125*	0.55 *14*	0.5 *12*	1 *25,4*	1.79 *45,4*
1 1/2 *38,1*	1.5 *38*	0.67 *17*	2.67 *67,9*	1.6 *40,7*	5.31 *135*	0.55 *14*	0.5 *12*	1.19 *30,2*	2.02 *51,2*
1 15/16 *49,213*	1.65 *42*	0.75 *19*	2.91 *74*	1.72 *43,6*	6.02 *153*	0.71 *18*	0.625 *16*	1.28 *32,6*	2.11 *53,6*

1.5 Plummer block composite and stainless steel ball bearing units, metric shafts

d **20 – 50** mm

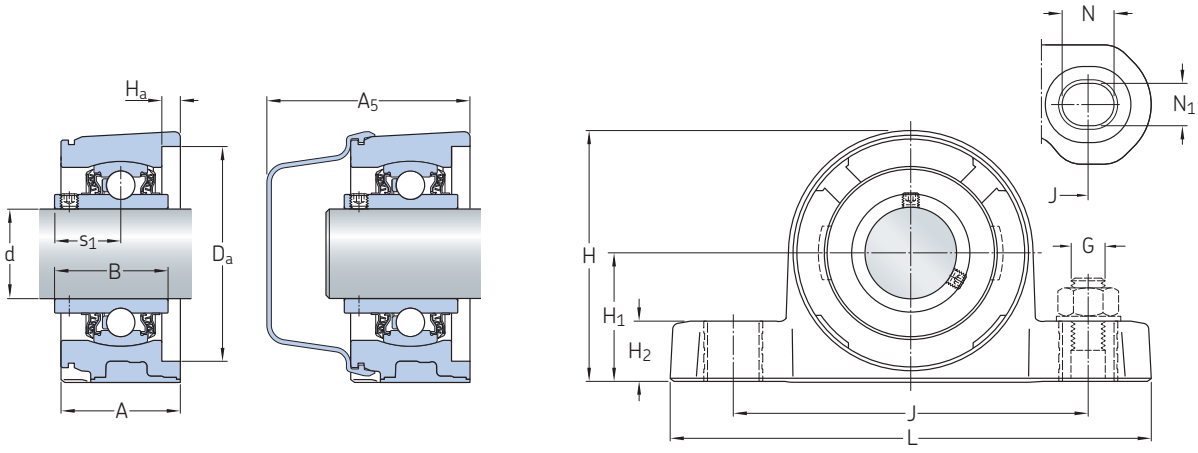

P2BC (composite housing)

Principal dimensions			Basic load ratings dynamic	static	Fatigue load limit	Limiting speed with shaft tolerance h6	Mass	Designations Bearing unit	Associated end cover
d	H_1	J	C	C_0	P_u				
mm			kN		kN	r/min	kg	–	
20	33,3	95	10,8	6,55	0,28	5 000	0,27	**P2BC 20M-TPSS**	ECB 504
	33,3	95	12,7	6,55	0,28	5 000	0,27	**P2BC 20M-TPZM**	ECB 504
	33,3	96,5	10,8	6,55	0,28	5 000	0,65	**P2BSS 20M-YTPSS**	ECW 204
25	36,5	105	11,9	7,8	0,335	4 300	0,34	**P2BC 25M-TPSS**	ECB 505
	36,5	105	14	7,8	0,335	4 300	0,34	**P2BC 25M-TPZM**	ECB 505
	36,5	102	11,9	7,8	0,335	4 300	0,85	**P2BSS 25M-YTPSS**	ECW 205
30	42,9	119	16,3	11,2	0,475	3 800	0,53	**P2BC 30M-TPSS**	ECB 506
	42,9	119	19,5	11,2	0,475	3 800	0,53	**P2BC 30M-TPZM**	ECB 506
	42,9	117,5	16,3	11,2	0,475	3 800	1,3	**P2BSS 30M-YTPSS**	ECW 206
	47,6	127	21,6	15,3	0,655	3 200	0,68	**P2BC 35M-TPSS**	ECB 507
	47,6	127	25,5	15,3	0,655	3 200	0,68	**P2BC 35M-TPZM**	ECB 507
35	47,6	126	21,6	15,3	0,655	3 200	1,75	**P2BSS 35M-YTPSS**	ECW 207
	49,2	137	24,7	19	0,8	2 800	0,87	**P2BC 40M-TPSS**	ECB 508
	49,2	137	30,7	19	0,8	2 800	0,87	**P2BC 40M-TPZM**	ECB 508
40	49,2	135,5	24,7	19	0,8	2 800	2,1	**P2BSS 40M-YTPSS**	ECW 208
50	57,2	159,5	29,6	23,2	0,98	2 200	1,1	**P2BC 50M-TPSS**	ECB 510
	57,2	159,5	35,1	23,2	0,98	2 200	1,1	**P2BC 50M-TPZM**	ECB 510

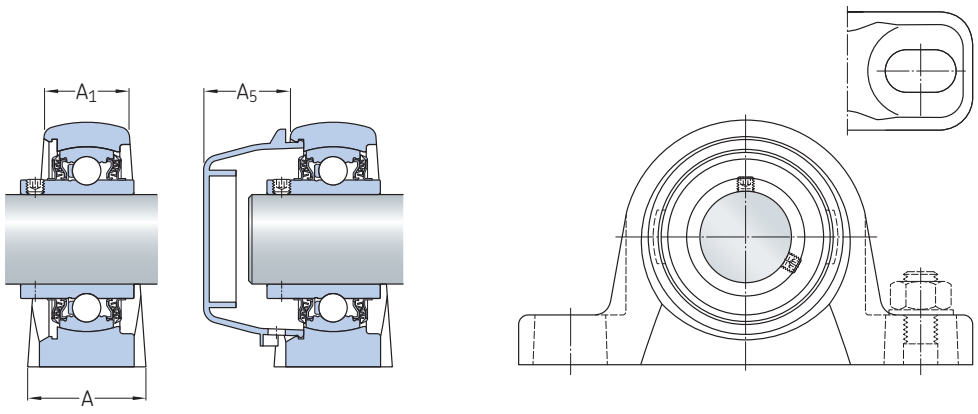

P2BSS (stainless steel housing)

Dimensions

d	A	A_1	A_5	B	D_a	H	H_2	H_a	L	N	N_1	G	s_1
mm													
20	36	–	63,1	31	52	64,6	17	6	129	14	12	10	18,3
	36	–	63,1	31	52	64,6	17	6	129	14	12	10	18,3
	32	23	24,5	31	–	63,5	14	–	127	21	11,5	10	18,3
25	36		62,6	34,1	62	72,5	17	6	142	14	12	10	19,8
	36		62,6	34,1	62	72,5	17	6	142	14	12	10	19,8
	37	30	24,5	34,1		70	16		133,5	19,5	11,5	10	19,8
30	40	–	68,1	38,1	72	84	20	6	161	17	14	12	22,2
	40	–	68,1	38,1	72	84	20	6	161	17	14	12	22,2
	40	28	29	38,1	–	82	16,5	–	152,5	24	14,5	12	22,2
35	40	–	68,6	42,9	82	93,6	20	6	169	17	14	12	25,4
	40	–	68,6	42,9	82	93,6	20	6	169	17	14	12	25,4
	44	29	30,5	42,9	–	93	19	–	160,5	21,5	14,5	12	25,4
40	44	–	73,9	49,2	88	98,2	20	6	179	17	14	12	30,2
	44	–	73,9	49,2	88	98,2	20	6	179	17	14	12	30,2
	48	33	31,5	49,2	–	99	19	–	174,5	24,5	14,5	12	30,2
50	44	–	76	51,6	98	110,5	23	6	208	24	18	16	32,6
	44	–	76	51,6	98	110,5	23	6	208	24	18	16	32,6

1.5 Plummer block composite and stainless steel ball bearing units, inch shafts

d **3/4 – 1 1/4** in.
19,05 – 31,75 mm

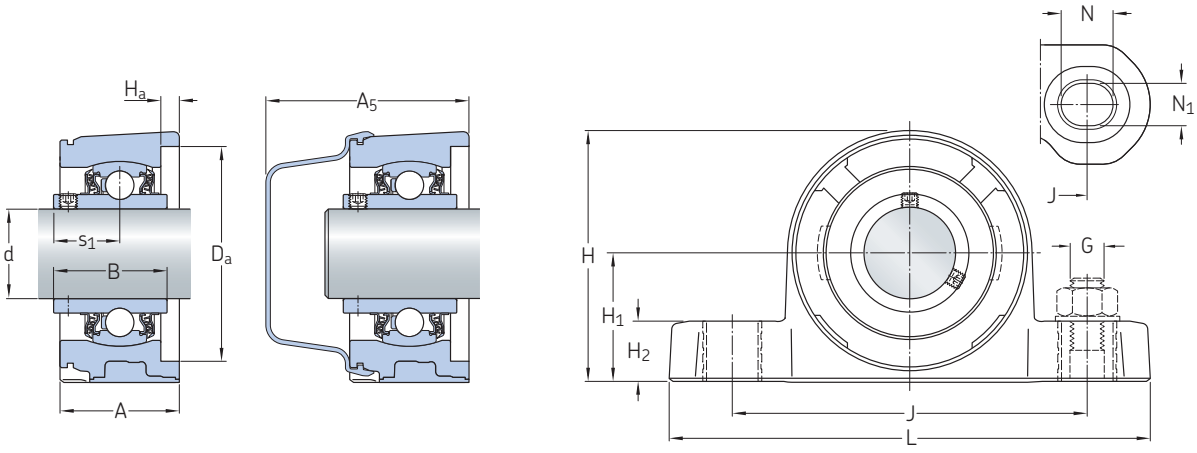

P2BC (composite housing)

Principal dimensions			Basic load ratings dynamic	static	Fatigue load limit	Limiting speed with shaft tolerance h6	Mass	Designations Bearing unit	Associated end cover
d	H_1	J	C	C_0	P_u				
in./*mm*			lbf/*kN*		lbf/*kN*	r/min	lb/*kg*	–	
3/4	1.311	3.74	2 430	1 470	62.9	5 000	0.62	**P2BC 012-TPSS**	ECB 504
19,05	*33,3*	*95*	*10,8*	*6,55*	*0,28*		*0,28*		
	1.311	3.74	2 860	1 470	62.9	5 000	0.62	**P2BC 012-TPZM**	ECB 504
	33,3	*95*	*12,7*	*6,55*	*0,28*		*0,28*		
	1.311	3.8	2 430	1 470	62.9	5 000	1.45	**P2BSS 012-YTPSS**	ECW 204
	33,3	*96,5*	*10,8*	*6,55*	*0,28*		*0,66*		
15/16	1.437	4.13	3 150	1 750	75.3	4 300	0.79	**P2BC 015-TPZM**	ECB 505
23,813	*36,5*	*105*	*14*	*7,8*	*0,335*		*0,36*		
1	1.437	4.13	2 680	1 750	75.3	4 300	0.75	**P2BC 100-TPSS**	ECB 505
25,4	*36,5*	*105*	*11,9*	*7,8*	*0,335*		*0,34*		
	1.437	4.13	3 150	1 750	75.3	4 300	0.75	**P2BC 100-TPZM**	ECB 505
	36,5	*105*	*14*	*7,8*	*0,335*		*0,34*		
	1.437	4.02	2 680	1 750	75.3	4 300	1.85	**P2BSS 100-YTPSS**	ECW 205
	36,5	*102*	*11,9*	*7,8*	*0,335*		*0,85*		
1 3/16	1.689	4.69	3 660	2 520	107	3 800	1.15	**P2BC 103-TPSS**	ECB 506
30,163	*42,9*	*119*	*16,3*	*11,2*	*0,475*		*0,53*		
	1.689	4.69	4 380	2 520	107	3 800	1.15	**P2BC 103-TPZM**	ECB 506
	42,9	*119*	*19,5*	*11,2*	*0,475*		*0,53*		
	1.689	4.63	3 660	2 520	107	3 800	2.85	**P2BSS 103-YTPSS**	ECW 206
	42,9	*117,5*	*16,3*	*11,2*	*0,475*		*1,3*		
1 1/4	1.689	4.69	3 660	2 520	107	3 800	1.1	**P2BC 104S-TPSS**	ECB 506
31,75	*42,9*	*119*	*16,3*	*11,2*	*0,475*		*0,5*		
	1.689	4.69	4 380	2 520	107	3 800	1.1	**P2BC 104S-TPZM**	ECB 506
	42,9	*119*	*19,5*	*11,2*	*0,475*		*0,51*		
	1.689	4.63	3 660	2 520	107	3 800	2.85	**P2BSS 104S-YTPSS**	ECW 206
	42,9	*117,5*	*16,3*	*11,2*	*0,475*		*1,3*		
	1.874	5	4 860	3 440	147	3 200	1.65	**P2BC 104-TPSS**	ECB 507
	47,6	*127*	*21,6*	*15,3*	*0,655*		*0,74*		
	1.874	5	5 730	3 440	147	3 200	1.65	**P2BC 104-TPZM**	ECB 507
	47,6	*127*	*25,5*	*15,3*	*0,655*		*0,74*		
	1.874	4.96	4 860	3 440	147	3 200	3.95	**P2BSS 104-YTPSS**	ECW 207
	47,6	*126*	*21,6*	*15,3*	*0,655*		*1,8*		

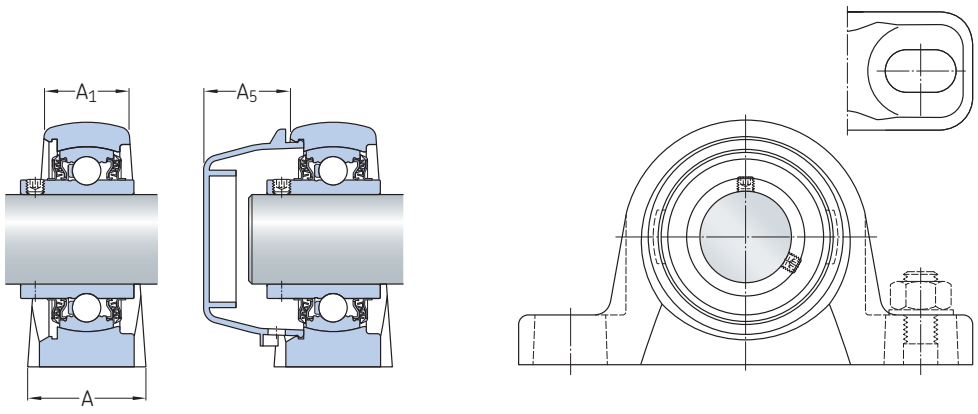

P2BSS (stainless steel housing)

Dimensions

d	A	A_1	A_5	B	D_a	H	H_2	H_a	L	N	N_1	G	s_1
in./*mm*													
3/4	1.42	–	2.48	1.22	2.05	2.54	0.67	0.24	5.08	0.55	0.47	0.375	0.72
19,05	*36*	–	*63,1*	*31*	*52*	*64,6*	*17*	*6*	*129*	*14*	*12*	*10*	*18,3*
	1.42	–	2.48	1.22	2.05	2.54	0.67	0.24	5.08	0.55	0.47	0.375	0.72
	36	–	*63,1*	*31*	*52*	*64,6*	*17*	*6*	*129*	*14*	*12*	*10*	*18,3*
	1.26	0.91	0.96	1.22	–	2.5	0.55	–	5	0.45	0.83	0.375	0.72
	32	*23*	*24,5*	*31*	–	*63,5*	*14*	–	*127*	*11,5*	*21*	*10*	*18,3*
15/16	1.42	–	2.46	1.34	2.44	2.85	0.67	0.24	5.59	0.55	0.47	0.375	0.78
23,813	*36*	–	*62,6*	*34,1*	*62*	*72,5*	*17*	*6*	*142*	*14*	*12*	*10*	*19,8*
1	1.42	–	2.46	1.34	2.44	2.85	0.67	0.24	5.59	0.55	0.47	0.375	0.78
25,4	*36*	–	*62,6*	*34,1*	*62*	*72,5*	*17*	*6*	*142*	*14*	*12*	*10*	*19,8*
	1.42	–	2.46	1.34	2.44	2.85	0.67	0.24	5.59	0.55	0.47	0.375	0.78
	36	–	*62,6*	*34,1*	*62*	*72,5*	*17*	*6*	*142*	*14*	*12*	*10*	*19,8*
	1.46	1.18	0.96	1.34	–	2.76	0.63	–	5.26	0.45	0.77	0.375	0.78
	37	*30*	*24,5*	*34,1*	–	*70*	*16*	–	*133,5*	*11,5*	*19,5*	*10*	*19,8*
1 3/16	1.57	–	2.68	1.5	2.83	3.31	0.79	0.24	6.34	0.67	0.55	0.5	0.87
30,163	*40*	–	*68,1*	*38,1*	*72*	*84*	*20*	*6*	*161*	*17*	*14*	*12*	*22,2*
	1.57	–	2.68	1.5	2.83	3.31	0.79	0.24	6.34	0.67	0.55	0.5	0.87
	40	–	*68,1*	*38,1*	*72*	*84*	*20*	*6*	*161*	*17*	*14*	*12*	*22,2*
	1.57	1.1	1.14	1.5	–	3.23	0.65	–	6	0.57	0.94	0.5	0.87
	40	*28*	*29*	*38,1*	–	*82*	*16,5*	–	*152,5*	*14,5*	*24*	*12*	*22,2*
1 1/4	1.57	–	2.68	1.5	2.83	3.31	0.79	0.24	6.34	0.67	0.55	0.5	0.87
31,75	*40*	–	*68,1*	*38,1*	*72*	*84*	*20*	*6*	*161*	*17*	*14*	*12*	*22,2*
	1.57	–	2.68	1.5	2.83	3.31	0.79	0.24	6.34	0.67	0.55	0.5	0.87
	40	–	*68,1*	*38,1*	*72*	*84*	*20*	*6*	*161*	*17*	*14*	*12*	*22,2*
	1.57	–	2.68	1.5	2.83	3.31	0.79	0.24	6.34	0.67	0.55	0.5	0.87
	40	–	*68,1*	*38,1*	*72*	*84*	*20*	*6*	*161*	*17*	*14*	*12*	*22,2*
	1.57	–	2.7	1.69	3.23	3.69	0.79	0.24	6.65	0.67	0.55	0.5	1
	40	–	*68,6*	*42,9*	*82*	*93,6*	*20*	*6*	*169*	*17*	*14*	*12*	*25,4*
	1.57	–	2.7	1.69	3.23	3.69	0.79	0.24	6.65	0.67	0.55	0.5	1
	40	–	68,6	*42,9*	*82*	*93,6*	*20*	*6*	*169*	*17*	*14*	*12*	*25,4*
	1.73	1.14	1.2	1.69	–	3.66	0.75	–	6.32	0.57	0.85	0.5	1
	44	*29*	*30,5*	*42,9*	–	*93*	*19*	–	*160,5*	*14,5*	*21,5*	*12*	*25,4*

1.5 Plummer block composite and stainless steel ball bearing units, inch shafts

d **1 3/8 – 1 15/16** in.
34,925 – 49,213 mm

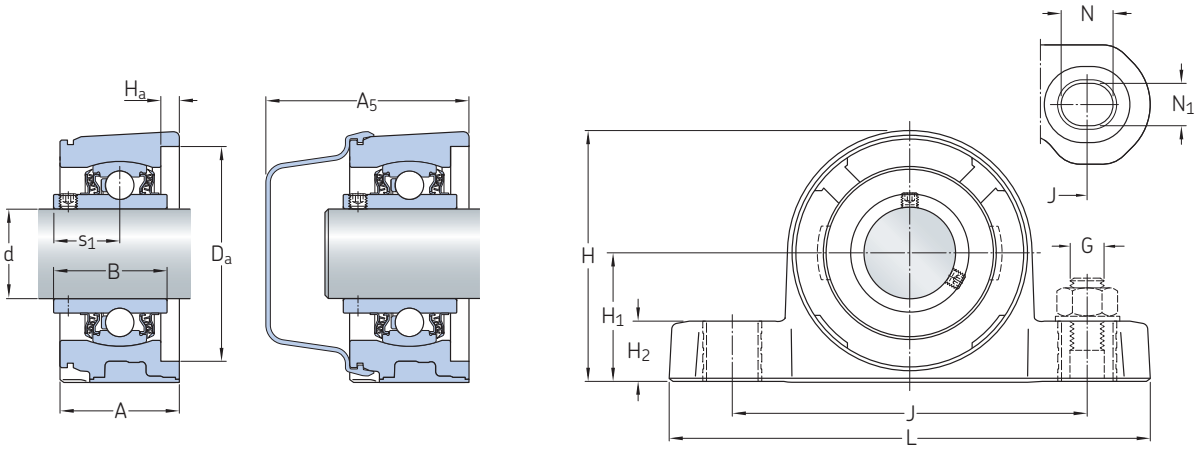

P2BC (composite housing)

Principal dimensions			Basic load ratings dynamic	static	Fatigue load limit	Limiting speed with shaft tolerance h6	Mass	Designations Bearing unit	Associated end cover
d	H_1	J	C	C_0	P_u				
in./*mm*			lbf/*kN*		lbf/*kN*	r/min	lb/*kg*	–	
1 3/8	1.874	5	4 860	3 440	147	3 200	1.5	**P2BC 106-TPSS**	ECB 507
34,925	*47,6*	*127*	*21,6*	*15,3*	*0,655*		*0,68*		
	1.874	5	5 730	3 440	147	3 200	1.5	**P2BC 106-TPZM**	ECB 507
	47,6	*127*	*25,5*	*15,3*	*0,655*		*0,69*		
	1.874	4.96	4 860	3 440	147	3 200	3.85	**P2BSS 106-YTPSS**	ECW 207
	47,6	*126*	*21,6*	*15,3*	*0,655*		*1,75*		
1 7/16	1.874	5	4 860	3 440	147	3 200	1.45	**P2BC 107-TPSS**	ECB 507
36,513	*47,6*	*127*	*21,6*	*15,3*	*0,655*		*0,65*		
	1.874	5	5 730	3 440	147	3 200	1.45	**P2BC 107-TPZM**	ECB 507
	47,6	*127*	*25,5*	*15,3*	*0,655*		*0,66*		
	1.874	4.96	4 860	3 440	147	3 200	3.75	**P2BSS 107-YTPSS**	ECW 207
	47,6	*126*	*21,6*	*15,3*	*0,655*		*1,7*		
1 1/2	1.937	5.39	5 550	4 270	180	2 800	2	**P2BC 108-TPSS**	ECB 508
38,1	*49,2*	*137*	*24,7*	*19*	*0,8*		*0,91*		
	1.937	5.39	6 900	4 270	180	2 800	2	**P2BC 108-TPZM**	ECB 508
	49,2	*137*	*30,7*	*19*	*0,8*		*0,91*		
	1.937	5.33	5 550	4 270	180	2 800	4.75	**P2BSS 108-YTPSS**	ECW 208
	49,2	*135,5*	*24,7*	*19*	*0,8*		*2,15*		
1 15/16	2.252	6.28	6 650	5 220	220	2 200	2.45	**P2BC 115-TPSS**	ECB 510
49,213	*57,2*	*159,5*	*29,6*	*23,2*	*0,98*		*1,1*		
	2.252	6.28	7 890	5 220	220	2 200	2.5	**P2BC 115-TPZM**	ECB 510
	57,2	*159,5*	*35,1*	*23,2*	*0,98*		*1,15*		

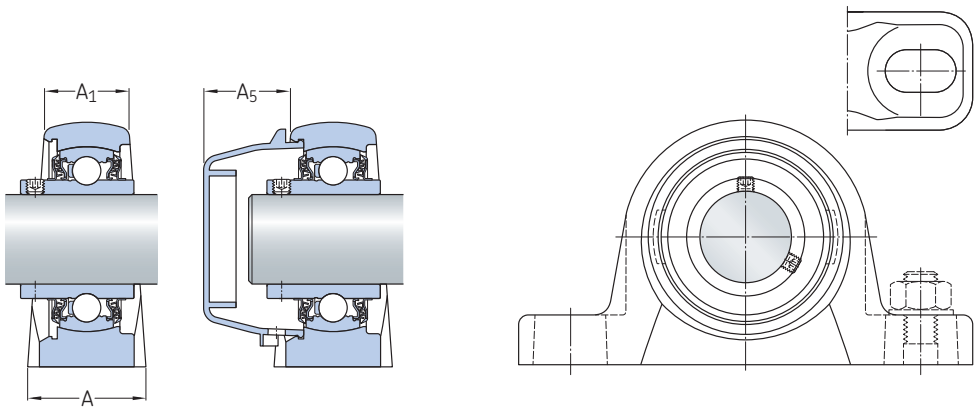

P2BSS (stainless steel housing)

Dimensions

d	A	A_1	A_5	B	D_a	H	H_2	H_a	L	N	N_1	G	s_1
in./*mm*													
1 3/8	1.57	–	2.7	1.69	3.23	3.69	0.79	0.24	6.65	0.67	0.55	0.5	1
34,925	*40*	–	*68,6*	*42,9*	*82*	*93,6*	*20*	*6*	*169*	*17*	*14*	*12*	*25,4*
	1.57	–	2.7	1.69	3.23	3.69	0.79	0.24	6.65	0.67	0.55	0.5	1
	40	–	*68,6*	*42,9*	*82*	*93,6*	*20*	*6*	*169*	*17*	*14*	*12*	*25,4*
	1.73	1.14	1.2	1.69	–	3.66	0.75	–	6.32	0.57	0.85	0.5	1
	44	*29*	*30,5*	*42,9*	–	*93*	*19*	–	*160,5*	*14,5*	*21,5*	*12*	*25,4*
1 7/16	1.57	–	2.7	1.69	3.23	3.69	0.79	0.24	6.65	0.67	0.55	0.5	1
36,513	*40*	–	*68,6*	*42,9*	*82*	*93,6*	*20*	*6*	*169*	*17*	*14*	*12*	*25,4*
	1.57	–	2.7	1.69	3.23	3.69	0.79	0.24	6.65	0.67	0.55	0.5	1
	40	–	*68,6*	*42,9*	*82*	*93,6*	*20*	*6*	*169*	*17*	*14*	*12*	*25,4*
	1.73	1.14	1.2	1.69	–	3.66	0.75	–	6.32	0.57	0.85	0.5	1
	44	*29*	*30,5*	*42,9*	–	*93*	*19*	–	*160,5*	*14,5*	*21,5*	*12*	*25,4*
1 1/2	1.73	–	2.91	1.94	3.46	3.87	0.79	0.24	7.05	0.67	0.55	0.5	1.19
38,1	*44*	–	*73,9*	*49,2*	*88*	*98,2*	*20*	*6*	*179*	*17*	*14*	*12*	*30,2*
	1.73	–	2.91	1.94	3.46	3.87	0.79	0.24	7.05	0.67	0.55	0.5	1.19
	44	–	*73,9*	*49,2*	*88*	*98,2*	*20*	*6*	*179*	*17*	*14*	*12*	*30,2*
	1.89	1.3	1.24	1.94	–	3.9	0.75	–	6.87	0.57	0.96	0.5	1.19
	48	*33*	*31,5*	*49,2*	–	*99*	*19*	–	*174,5*	*14,5*	*24,5*	*12*	*30,2*
1 15/16	1.73	–	2.99	2.03	3.86	4.35	0.91	0.24	8.19	0.94	0.71	0.625	1.28
49,213	*44*	–	*76*	*51,6*	*98*	*110,5*	*23*	*6*	*208*	*24*	*18*	*16*	*32,6*
	1.73	–	2.99	2.03	3.86	4.35	0.91	0.24	8.19	0.94	0.71	0.625	1.28
	44	–	*76*	*51,6*	*98*	*110,5*	*23*	*6*	*208*	*24*	*18*	*16*	*32,6*

1.6 Plummer block sealed composite ball bearing units (DFH), metric shafts

d **20 – 50** mm

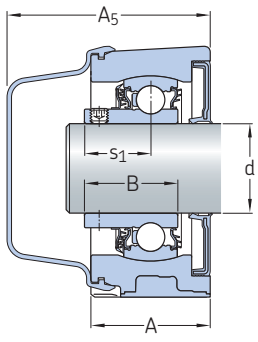

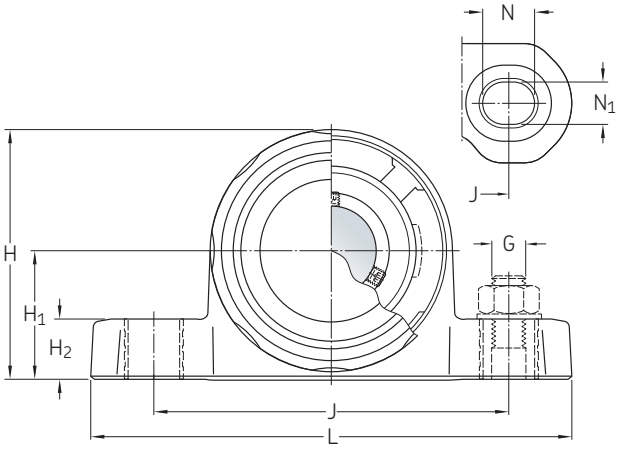

Principal dimensions			Basic load ratings dynamic	static	Fatigue load limit	Limiting speed with shaft tolerance h6	Mass	Designation
d	H_1	J	C	C_0	P_u			
mm			kN		kN	r/min	kg	–
20	33,3	95	10,8	6,55	0,28	5 000	0,28	**P2BC 20M-CPSS-DFH**
25	36,5	105	11,9	7,8	0,335	4 300	0,37	**P2BC 25M-CPSS-DFH**
30	42,9	119	16,3	11,2	0,475	3 800	0,55	**P2BC 30M-CPSS-DFH**
35	47,6	127	21,6	15,3	0,655	3 200	0,7	**P2BC 35M-CPSS-DFH**
40	49,2	137	24,7	19	0,8	2 800	0,88	**P2BC 40M-CPSS-DFH**
50	57,2	159,5	29,6	23,2	0,98	2 200	1,1	**P2BC 50M-CPSS-DFH**

Dimensions

d	A	A_5	B	H	H_2	L	N	N_1	G	s_1
mm										
20	36	63,1	25,3	64,6	17	129	14	12	10	18,3
25	36	62,6	27,3	72,5	17	142	14	12	10	19,8
30	40	68,1	31,2	84	20	161	17	14	12	22,2
35	40	68,6	34,9	93,6	20	169	17	14	12	25,4
40	44	73,9	40,7	98,2	20	179	17	14	12	30,2
50	44	76	43,6	110,5	23	208	24	18	16	32,6

1.6 Plummer block sealed composite ball bearing units (DFH), inch shafts

d **3/4 – 1 15/16** in.
19,05 – 49,213 mm

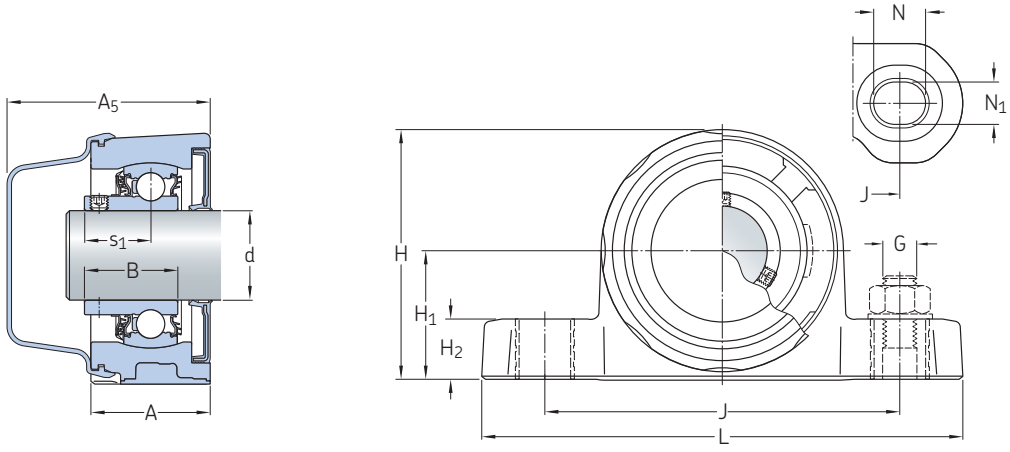

Principal dimensions			Basic load ratings dynamic	static	Fatigue load limit	Limiting speed with shaft tolerance h6	Mass	Designation
d	H_1	J	C	C_0	P_u			
in./*mm*			lbf/*kN*		lbf/*kN*	r/min	lb/*kg*	–
3/4	1.311	3.74	2 430	1 470	62.9	5 000	0.64	**P2BC 012-CPSS-DFH**
19,05	*33,3*	*95*	*10,8*	*6,55*	*0,28*		*0,29*	
1	1.437	4.13	2 680	1 750	75.3	4 300	0.79	**P2BC 100-CPSS-DFH**
25,4	*36,5*	*105*	*11,9*	*7,8*	*0,335*		*0,36*	
1 3/16	1.689	4.69	3 660	2 520	107	3 800	1.2	**P2BC 103-CPSS-DFH**
30,163	*42,9*	*119*	*16,3*	*11,2*	*0,475*		*0,55*	
1 1/4	1.689	4.69	3 660	2 520	107	3 800	1.15	**P2BC 104S-CPSS-DFH**
31,75	*42,9*	*119*	*16,3*	*11,2*	*0,475*		*0,53*	
	1.874	5	4 860	3 440	147	3 200	1.65	**P2BC 104-CPSS-DFH**
	47,6	*127*	*21,6*	*15,3*	*0,655*		*0,75*	
1 3/8	1.874	5	4 860	3 440	147	3 200	1.55	**P2BC 106-CPSS-DFH**
34,925	*47,6*	*127*	*21,6*	*15,3*	*0,655*		*0,7*	
1 7/16	1.874	5	4 860	3 440	147	3 200	1.5	**P2BC 107-CPSS-DFH**
36,513	*47,6*	*127*	*21,6*	*15,3*	*0,655*		*0,68*	
1 1/2	1.937	5.39	5 550	4 270	180	2 800	2.05	**P2BC 108-CPSS-DFH**
38,1	*49,2*	*137*	*24,7*	*19*	*0,8*		*0,92*	
1 15/16	2.252	6.28	6 650	5 220	220	2 200	2.5	**P2BC 115-CPSS-DFH**
49,213	*57,2*	*159,5*	*29,6*	*23,2*	*0,98*		*1,15*	

Dimensions

d	A	A_5	B	H	H_2	L	N	N_1	G	s_1
in./*mm*										
3/4 *19,05*	1.42 *36*	2.48 *63,1*	1 *25,3*	2.54 *64,6*	0.67 *17*	5.08 *129*	0.55 *14*	0.47 *12*	0.375 *10*	0.72 *18,3*
1 *25,4*	1.42 *36*	2.46 *62,6*	1.07 *27,3*	2.85 *72,5*	0.67 *17*	5.59 *142*	0.55 *14*	0.47 *12*	0.375 *10*	0.78 *19,8*
1 3/16 *30,163*	1.57 *40*	2.68 *68,1*	1.23 *31,2*	3.31 *84*	0.79 *20*	6.34 *161*	0.67 *17*	0.55 *14*	0.5 *12*	0.87 *22,2*
1 1/4 *31,75*	1.57 *40* 1.57 *40*	2.68 *68,1* 2.7 *68,6*	1.23 *31,2* 1.37 *34,9*	3.31 *84* 3.69 *93,6*	0.79 *20* 0.79 *20*	6.34 *161* 6.65 *169*	0.67 *17* 0.67 *17*	0.55 *14* 0.55 *14*	0.5 *12* 0.5 *12*	0.87 *22,2* 1 *25,4*
1 3/8 *34,925*	1.57 *40*	2.7 *68,6*	1.37 *34,9*	3.69 *93,6*	0.79 *20*	6.65 *169*	0.67 *17*	0.55 *14*	0.5 *12*	1 *25,4*
1 7/16 *36,513*	1.57 *40*	2.7 *68,6*	1.37 *34,9*	3.69 *93,6*	0.79 *20*	6.65 *169*	0.67 *17*	0.55 *14*	0.5 *12*	1 *25,4*
1 1/2 *38,1*	1.73 *44*	2.91 *73,9*	1.6 *40,7*	3.87 *98,2*	0.79 *20*	7.05 *179*	0.67 *17*	0.55 *14*	0.5 *12*	1.19 *30,2*
1 15/16 *49,213*	1.73 *44*	2.99 *76*	1.72 *43,6*	4.35 *110,5*	0.91 *23*	8.19 *208*	0.94 *24*	0.71 *18*	0.625 *16*	1.28 *32,6*

1.7 3-bolt bracket flanged composite ball bearing units, metric shafts

d **20 – 50** mm

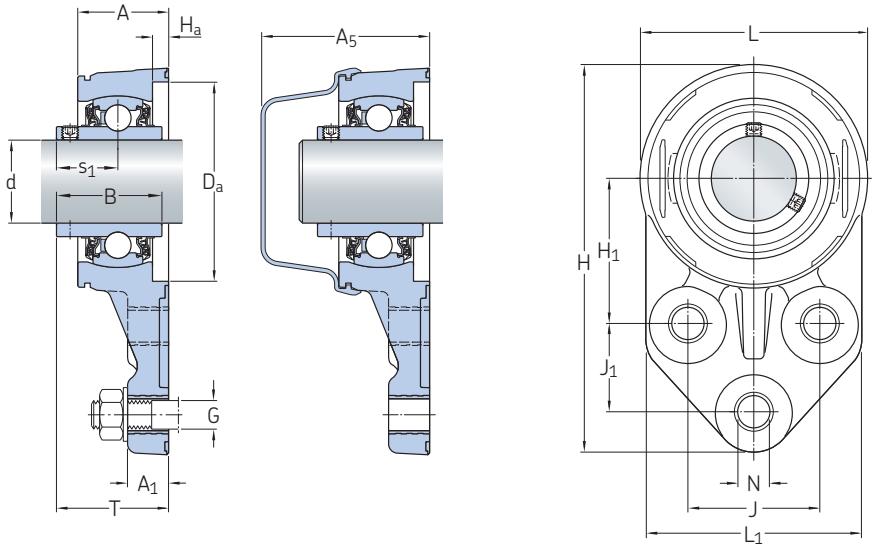

Principal dimensions				Basic load ratings dynamic	static	Fatigue load limit	Limiting speed with shaft tolerance h6	Mass	Designations Bearing unit	Associated end cover
d	H_1	J	J_1	C	C_0	P_u				
mm				kN		kN	r/min	kg	–	
20	43	38	22	10,8	6,55	0,28	5 000	0,26	**F3BBC 20M-TPSS**	ECB 504
	43	38	22	12,7	6,55	0,28	5 000	0,26	**F3BBC 20M-TPZM**	ECB 504
25	46	41,5	28,5	11,9	7,8	0,335	4 300	0,32	**F3BBC 25M-TPSS**	ECB 505
	46	41,5	28,5	14	7,8	0,335	4 300	0,32	**F3BBC 25M-TPZM**	ECB 505
30	52,5	47,5	32	16,3	11,2	0,475	3 800	0,47	**F3BBC 30M-TPSS**	ECB 506
	52,5	47,5	32	19,5	11,2	0,475	3 800	0,47	**F3BBC 30M-TPZM**	ECB 506
35	60,5	51	32	21,6	15,3	0,655	3 200	0,66	**F3BBC 35M-TPSS**	ECB 507
	60,5	51	32	25,5	15,3	0,655	3 200	0,66	**F3BBC 35M-TPZM**	ECB 507
40	60	50	31	24,7	19	0,8	2 800	0,81	**F3BBC 40M-TPSS**	ECB 508
	60	50	31	30,7	19	0,8	2 800	0,81	**F3BBC 40M-TPZM**	ECB 508
50	68	60	46	29,6	23,2	0,98	2 200	1,1	**F3BBC 50M-TPSS**	ECB 510
	68	60	46	35,1	23,2	0,98	2 200	1,1	**F3BBC 50M-TPZM**	ECB 510

Dimensions

d	A	A_1	A_5	B	D_a	H	H_a	L	L_1	N	G	s_1	T
mm													
20	27	15	54,1	31	52	114	6	68	68	12	10	18,3	35
	27	15	54,1	31	52	114	6	68	68	12	10	18,3	35,3
25	29	15	55,6	34,1	62	125	6	72	72	12	10	19,8	37
	29	15	55,6	34,1	62	125	6	72	72	12	10	19,8	37,3
30	33	15	61,1	38,1	72	140	6	82	78	12	10	22,2	41,2
	33	15	61,1	38,1	72	140	6	82	78	12	10	22,2	41,2
35	36	17	64,6	42,9	82	155	6	92	86	14	12	25,4	45,1
	36	17	64,6	42,9	82	155	6	92	86	14	12	25,4	45,4
40	38	17	67,9	49,2	88	157	6	98	85	14	12	30,2	38,2
	38	17	67,9	49,2	88	157	6	98	85	14	12	30,2	51,2
50	42	19	74	51,6	98	189	6	108	104	18	16	32,6	53,7
	42	19	74	51,6	98	189	6	108	104	18	16	32,6	54,1

1.7 3-bolt bracket flanged composite ball bearing units, inch shafts

d **3/4 – 1 3/8** in.
19,05 – 34,925 mm

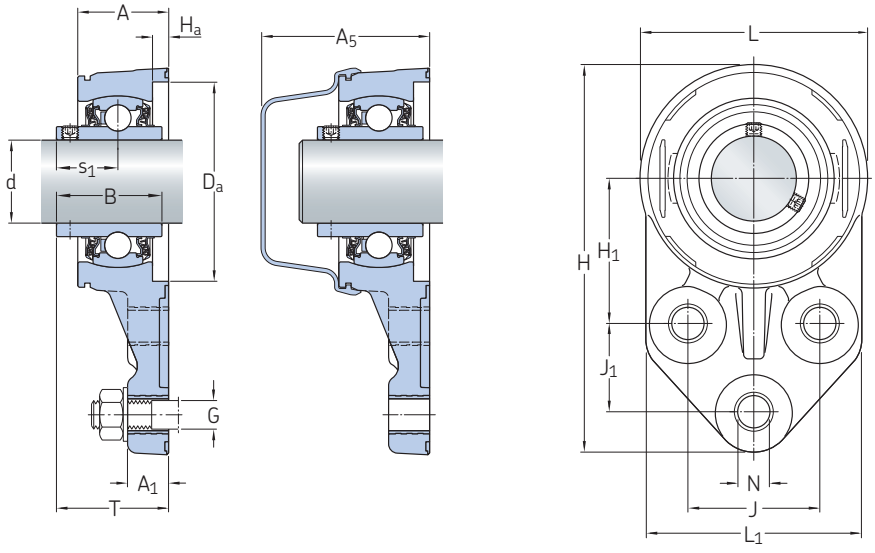

Principal dimensions				Basic load ratings dynamic	static	Fatigue load limit	Limiting speed with shaft tolerance h6	Mass	Designations Bearing unit	Associated end cover
d	H_1	J	J_1	C	C_0	P_u				
in./*mm*				lbf/*kN*		lbf/*kN*	r/min	lb/*kg*	–	
3/4	1.69	1.5	0.87	2 430	1 470	62.9	5 000	0.6	**F3BBC 012-TPSS**	ECB 504
19,05	*43*	*38*	*22*	*10,8*	*6,55*	*0,28*		*0,27*		
	1.69	1.5	0.87	2 860	1 470	62.9	5 000	0.57	**F3BBC 012-TPZM**	ECB 504
	43	*38*	*22*	*12,7*	*6,55*	*0,28*		*0,26*		
15/16	1.81	1.63	1.12	3 150	1 750	75.3	4 300	0.75	**F3BBC 015-TPZM**	ECB 505
23,813	*46*	*41,5*	*28,5*	*14*	*7,8*	*0,335*		*0,34*		
1	1.81	1.63	1.12	2 680	1 750	75.3	4 300	0.71	**F3BBC 100-TPSS**	ECB 505
25,4	*46*	*41,5*	*28,5*	*11,9*	*7,8*	*0,335*		*0,32*		
	1.81	1.63	1.12	3 150	1 750	75.3	4 300	0.71	**F3BBC 100-TPZM**	ECB 505
	46	*41,5*	*28,5*	*14*	*7,8*	*0,335*		*0,32*		
1 3/16	2.07	1.87	1.26	3 660	2 520	107	3 800	1.05	**F3BBC 103-TPSS**	ECB 506
30,163	*52,5*	*47,5*	*32*	*16,3*	*11,2*	*0,475*		*0,47*		
	2.07	1.87	1.26	4 380	2 520	107	3 800	1.05	**F3BBC 103-TPZM**	ECB 506
	52,5	*47,5*	*32*	*19,5*	*11,2*	*0,475*		*0,47*		
1 1/4	2.07	1.87	1.26	3 660	2 520	107	3 800	0.97	**F3BBC 104S-TPSS**	ECB 506
31,75	*52,5*	*47,5*	*32*	*16,3*	*11,2*	*0,475*		*0,44*		
	2.07	1.87	1.26	4 380	2 520	107	3 800	0.97	**F3BBC 104S-TPZM**	ECB 506
	52,5	*47,5*	*32*	*19,5*	*11,2*	*0,475*		*0,44*		
	2.38	2.01	1.26	4 860	3 440	147	3 200	1.6	**F3BBC 104-TPSS**	ECB 507
	60,5	*51*	*32*	*21,6*	*15,3*	*0,655*		*0,72*		
	2.38	2.01	1.26	5 730	3 440	147	3 200	1.6	**F3BBC 104-TPZM**	ECB 507
	60,5	*51*	*32*	*25,5*	*15,3*	*0,655*		*0,72*		
1 3/8	2.38	2.01	1.26	4 860	3 440	147	3 200	1.45	**F3BBC 106-TPSS**	ECB 507
34,925	*60,5*	*51*	*32*	*21,6*	*15,3*	*0,655*		*0,66*		
	2.38	2.01	1.26	5 730	3 440	147	3 200	1.45	**F3BBC 106-TPZM**	ECB 507
	60,5	*51*	*32*	*25,5*	*15,3*	*0,655*		*0,66*		

Dimensions

d	A	A_1	A_5	B	D_a	H	H_a	L	L_1	N	G	s_1	T
in./*mm*													
3/4	1.06	0.59	2.13	1.22	2.05	4.49	0.24	2.68	2.68	0.47	0.375	0.72	1.38
19,05	*27*	*15*	*54,1*	*31*	*52*	*114*	*6*	*68*	*68*	*12*	*10*	*18,3*	*35*
	1.06	0.59	2.13	1.22	2.05	4.49	0.24	2.68	2.68	0.47	0.375	0.72	1.39
	27	*15*	*54,1*	*31*	*52*	*114*	*6*	*68*	*68*	*12*	*10*	*18,3*	*35,3*
15/16	1.14	0.59	2.19	1.34	2.44	4.92	0.24	2.83	2.83	0.47	0.375	0.78	1.47
23,813	*29*	*15*	*55,6*	*34,1*	*62*	*125*	*6*	*72*	*72*	*12*	*10*	*19,8*	*37,3*
1	1.14	0.59	2.19	1.34	2.44	4.92	0.24	2.83	2.83	0.47	0.375	0.78	1.46
25,4	*29*	*15*	*55,6*	*34,1*	*62*	*125*	*6*	*72*	*72*	*12*	*10*	*19,8*	*37*
	1.14	0.59	2.19	1.34	2.44	4.92	0.24	2.83	2.83	0.47	0.375	0.78	1.47
	29	*15*	*55,6*	*34,1*	*62*	*125*	*6*	*72*	*72*	*12*	*10*	*19,8*	*37,3*
1 3/16	1.3	0.59	2.41	1.5	2.83	5.51	0.24	3.23	3.07	0.47	0.375	0.87	1.62
30,163	*33*	*15*	*61,1*	*38,1*	*72*	*140*	*6*	*82*	*78*	*12*	*10*	*22,2*	*41,2*
	1.3	0.59	2.41	1.5	2.83	5.51	0.24	3.23	3.07	0.47	0.375	0.87	1.62
	33	*15*	*61,1*	*38,1*	*72*	*140*	*6*	*82*	*78*	*12*	*10*	*22,2*	*41,2*
1 1/4	1.3	0.59	2.41	1.5	2.83	5.51	0.24	3.23	3.07	0.47	0.375	0.87	1.62
31,75	*33*	*15*	*61,1*	*38,1*	*72*	*140*	*6*	*82*	*78*	*12*	*10*	*22,2*	*41,2*
	1.3	0.59	2.41	1.5	2.83	5.51	0.24	3.23	3.07	0.47	0.375	0.87	1.62
	33	*15*	*61,1*	*38,1*	*72*	*140*	*6*	*82*	*78*	*12*	*10*	*22,2*	*41,2*
	1.42	0.67	2.54	1.69	3.23	6.1	0.24	3.62	3.39	0.55	0.5	1	1.78
	36	*17*	*64,6*	*42,9*	*82*	*155*	*6*	*92*	*86*	*14*	*12*	*25,4*	*45,1*
	1.42	0.67	2.54	1.69	3.23	6.1	0.24	3.62	3.39	0.55	0.5	1	1.79
	36	*17*	*64,6*	*42,9*	*82*	*155*	*6*	*92*	*86*	*14*	*12*	*25,4*	*45,4*
1 3/8	1.42	0.67	2.54	1.69	3.23	6.1	0.24	3.62	3.39	0.55	0.5	1	1.78
34,925	*36*	*17*	*64,6*	*42,9*	*82*	*155*	*6*	*92*	*86*	*14*	*12*	*25,4*	*45,1*
	1.42	0.67	2.54	1.69	3.23	6.1	0.24	3.62	3.39	0.55	0.5	1	1.79
	36	*17*	*64,6*	*42,9*	*82*	*155*	*6*	*92*	*86*	*14*	*12*	*25,4*	*45,4*

1.7 3-bolt bracket flanged composite ball bearing units, inch shafts

d **1 7/16 – 1 15/16** in.
36,513 – 49,213 mm

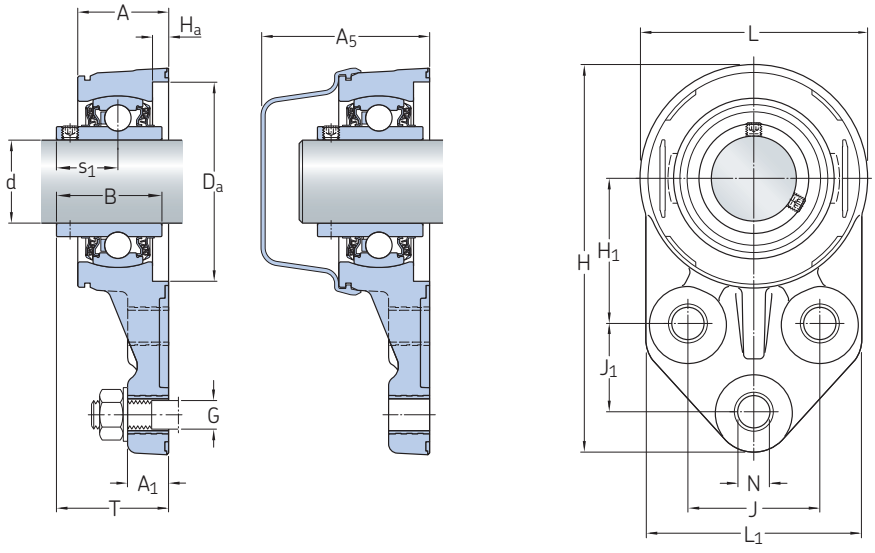

Principal dimensions				Basic load ratings dynamic	static	Fatigue load limit	Limiting speed with shaft tolerance h6	Mass	Designations Bearing unit	Associated end cover
d	H_1	J	J_1	C	C_0	P_u				
in./*mm*				lbf/*kN*		lbf/*kN*	r/min	lb/*kg*	–	
1 7/16	2.38	2.01	1.26	4 860	3 440	147	3 200	1.4	**F3BBC 107-TPSS**	ECB 507
36,513	*60,5*	*51*	*32*	*21,6*	*15,3*	*0,655*		*0,63*		
	2.38	2.01	1.26	5 730	3 440	147	3 200	1.45	**F3BBC 107-TPZM**	ECB 507
	60,5	*51*	*32*	*25,5*	*15,3*	*0,655*		*0,66*		
1 1/2	2.36	1.97	1.22	5 550	4 270	180	2 800	1.85	**F3BBC 108-TPSS**	ECB 508
38,1	*60*	*50*	*31*	*24,7*	*19*	*0,8*		*0,85*		
	2.36	*1.97*	*1.22*	*6 900*	*4 270*	*180*	*2 800*	*1.9*	**F3BBC 108-TPZM**	*ECB 508*
	60	*50*	*31*	*30,7*	*19*	*0,8*		*0,86*		
1 15/16	2.68	2.36	1.81	6 650	5 220	220	2 200	2.45	**F3BBC 115-TPSS**	ECB 510
49,213	*68*	*60*	*46*	*29,6*	*23,2*	*0,98*		*1,1*		
	2.68	2.36	1.81	7 890	5 220	220	2 200	2.45	**F3BBC 115-TPZM**	ECB 510
	68	*60*	*46*	*35,1*	*23,2*	*0,98*		*1,1*		

Dimensions

d	A	A_1	A_5	B	D_a	H	H_a	L	L_1	N	G	s_1	T
in./*mm*													
1 7/16	1.42	0.67	2.54	1.69	3.23	6.1	0.24	3.62	3.39	0.55	0.5	1	1.78
36,513	*36*	*17*	*64,6*	*42,9*	*82*	*155*	*6*	*92*	*86*	*14*	*12*	*25,4*	*45,1*
	1.42	0.67	2.54	1.69	3.23	6.1	0.24	3.62	3.39	0.55	0.5	1	1.79
	36	*17*	*64,6*	*42,9*	*82*	*155*	*6*	*92*	*86*	*14*	*12*	*25,4*	*45,4*
1 1/2	1.5	0.67	2.67	1.94	3.46	6.18	0.24	3.86	3.35	0.55	0.5	1.19	1.5
38,1	*38*	*17*	*67,9*	*49,2*	*88*	*157*	*6*	*98*	*85*	*14*	*12*	*30,2*	*38,2*
	1.5	0.67	2.67	1.94	3.46	6.18	0.24	3.86	3.35	0.55	0.5	1.19	2.02
	38	*17*	*67,9*	*49,2*	*88*	*157*	*6*	*98*	*85*	*14*	*12*	*30,2*	*51,2*
1 15/16	1.65	0.75	2.91	2.03	3.86	7.44	0.24	4.25	4.09	0.71	0.625	1.28	2.11
49,213	*42*	*19*	*74*	*51,6*	*98*	*189*	*6*	*108*	*104*	*18*	*16*	*32,6*	*53,7*
	1.65	0.75	2.91	2.03	3.86	7.44	0.24	4.25	4.09	0.71	0.625	1.28	2.13
	42	*19*	*74*	*51,6*	*98*	*189*	*6*	*108*	*104*	*18*	*16*	*32,6*	*54,1*

1.8 3-bolt bracket flanged sealed composite ball bearing units (DFH), metric shafts

d **20 – 50** mm

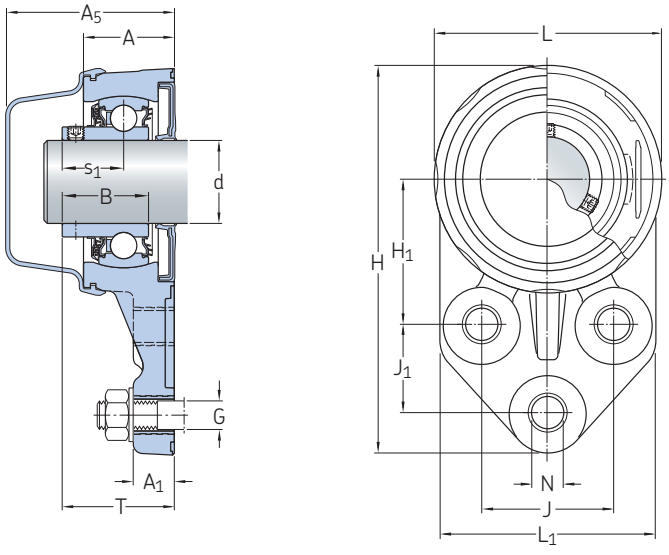

Principal dimensions				Basic load ratings dynamic	static	Fatigue load limit	Limiting speed with shaft tolerance h6	Mass	Designation
d	H_1	J	J_1	C	C_0	P_u			
mm				kN		kN	r/min	kg	–
20	43	38	22	10,8	6,55	0,28	5 000	0,28	**F3BBC 20M-CPSS-DFH**
25	46	41,5	28,5	11,9	7,8	0,335	4 300	0,34	**F3BBC 25M-CPSS-DFH**
30	52,5	47,5	32	16,3	11,2	0,475	3 800	0,49	**F3BBC 30M-CPSS-DFH**
35	60,5	51	32	21,6	15,3	0,655	3 200	0,68	**F3BBC 35M-CPSS-DFH**
40	60	50	31	24,7	19	0,8	2 800	0,82	**F3BBC 40M-CPSS-DFH**
50	68	60	46	29,6	23,2	0,98	2 200	1,1	**F3BBC 50M-CPSS-DFH**

Dimensions

d	A	A_1	A_5	B	H	L	L_1	N	G	s_1	T
mm											
20	27	15	54,1	25,3	114	68	68	12	10	18,3	35,3
25	29	15	55,6	27,3	125	72	72	12	10	19,8	37,3
30	33	15	61,1	31,2	140	82	78	12	10	22,2	41,2
35	36	17	64,6	34,9	155	92	86	14	12	25,4	45,4
40	38	17	67,9	40,7	157	98	85	14	12	30,2	51,2
50	42	19	74	43,6	189	108	104	18	16	32,6	54,1

1.8 3-bolt bracket flanged sealed composite ball bearing units (DFH), inch shaft

d **3/4 – 1 15/16** in.
19,05 – 49,213 mm

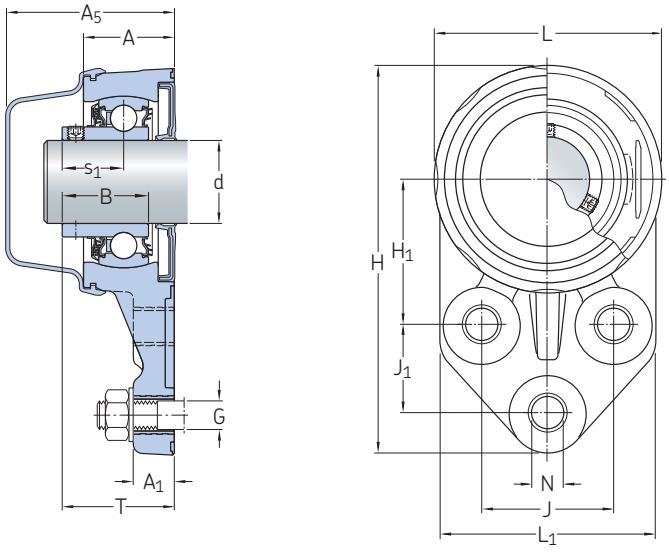

Principal dimensions				Basic load ratings dynamic	static	Fatigue load limit	Limiting speed with shaft tolerance h6	Mass	Designation
d	H_1	J	J_1	C	C_0	P_u			
in./*mm*				lbf/*kN*		lbf/*kN*	r/min	lb/*kg*	–
3/4	1.69	1.5	0.87	2 430	1 470	62.9	5 000	0.62	**F3BBC 012-CPSS-DFH**
19,05	*43*	*38*	*22*	*10,8*	*6,55*	*0,28*		*0,28*	
1	1.81	1.63	1.12	2 680	1 750	75.3	4 300	0.75	**F3BBC 100-CPSS-DFH**
25,4	*46*	*41,5*	*28,5*	*11,9*	*7,8*	*0,335*		*0,34*	
1 3/16	2.07	1.87	1.26	3 660	2 520	107	3 800	1.1	**F3BBC 103-CPSS-DFH**
30,163	*52,5*	*47,5*	*32*	*16,3*	*11,2*	*0,475*		*0,49*	
1 1/4	2.38	2.01	1.26	4 860	3 440	147	3 200	1.6	**F3BBC 104-CPSS-DFH**
31,75	*60,5*	*51*	*32*	*21,6*	*15,3*	*0,655*		*0,73*	
	2.07	1.87	1.26	3 660	2 520	107	3 800	1.05	**F3BBC 104S-CPSS-DFH**
	52,5	*47,5*	*32*	*16,3*	*11,2*	*0,475*		*0,47*	
1 3/8	2.38	2.01	1.26	4 860	3 440	147	3 200	1.5	**F3BBC 106-CPSS-DFH**
34,925	*60,5*	*51*	*32*	*21,6*	*15,3*	*0,655*		*0,68*	
1 7/16	2.38	2.01	1.26	4 860	3 440	147	3 200	1.45	**F3BBC 107-CPSS-DFH**
36,513	*60,5*	*51*	*32*	*21,6*	*15,3*	*0,655*		*0,66*	
1 1/2	2.36	1.97	1.22	5 550	4 270	180	2 800	1.9	**F3BBC 108-CPSS-DFH**
38,1	*60*	*50*	*31*	*24,7*	*19*	*0,8*		*0,86*	
1 15/16	2.68	2.36	1.81	6 650	5 220	220	2 200	2.45	**F3BBC 115-CPSS-DFH**
49,213	*68*	*60*	*46*	*29,6*	*23,2*	*0,98*		*1,1*	

Dimensions

d	A	A_1	A_5	B	H	L	L_1	N	G	s_1	T
in./*mm*											
3/4 *19,05*	1.06 *27*	0.59 *15*	2.13 *54,1*	1 *25,3*	4.49 *114*	2.68 *68*	2.68 *68*	0.47 *12*	0.375 *10*	0.72 *18,3*	1.39 *35,3*
1 *25,4*	1.14 *29*	0.59 *15*	2.19 *55,6*	1.07 *27,3*	4.92 *125*	2.83 *72*	2.83 *72*	0.47 *12*	0.375 *10*	0.78 *19,8*	1.47 *37,3*
1 3/16 *30,163*	1.3 *33*	0.59 *15*	2.41 *61,1*	1.23 *31,2*	5.51 *140*	3.23 *82*	3.07 *78*	0.47 *12*	0.375 *10*	0.87 *22,2*	1.62 *41,2*
1 1/4 *31,75*	1.42 *36* 1.3 *33*	0.67 *17* 0.59 *15*	2.54 *64,6* 2.41 *61,1*	1.37 *34,9* 1.23 *31,2*	6.1 *155* 5.51 *140*	3.62 *92* 3.23 *82*	3.39 *86* 3.07 *78*	0.55 *14* 0.47 *12*	0.5 *12* 0.375 *10*	1 *25,4* 0.87 *22,2*	1.79 *45,4* 1.62 *41,2*
1 3/8 *34,925*	1.42 *36*	0.67 *17*	2.54 *64,6*	1.37 *34,9*	6.1 *155*	3.62 *92*	3.39 *86*	0.55 *14*	0.5 *12*	1 *25,4*	1.79 *45,4*
1 7/16 *36,513*	1.42 *36*	0.67 *17*	2.54 *64,6*	1.37 *34,9*	6.1 *155*	3.62 *92*	3.39 *86*	0.55 *14*	0.5 *12*	1 *25,4*	1.79 *45,4*
1 1/2 *38,1*	1.5 *38*	0.67 *17*	2.67 *67,9*	1.6 *40,7*	6.18 *157*	3.86 *98*	3.35 *85*	0.55 *14*	0.5 *12*	1.19 *30,2*	2.02 *51,2*
1 15/16 *49,213*	1.65 *42*	0.75 *19*	2.91 *74*	1.72 *43,6*	7.44 *189*	4.25 *108*	4.09 *104*	0.71 *18*	0.625 *16*	1.28 *32,6*	2.13 *54,1*

1.9 Short base plummer block (tapped base pillow block) composite and stainless steel ball bearing units, metric shafts

d **20 – 50** mm

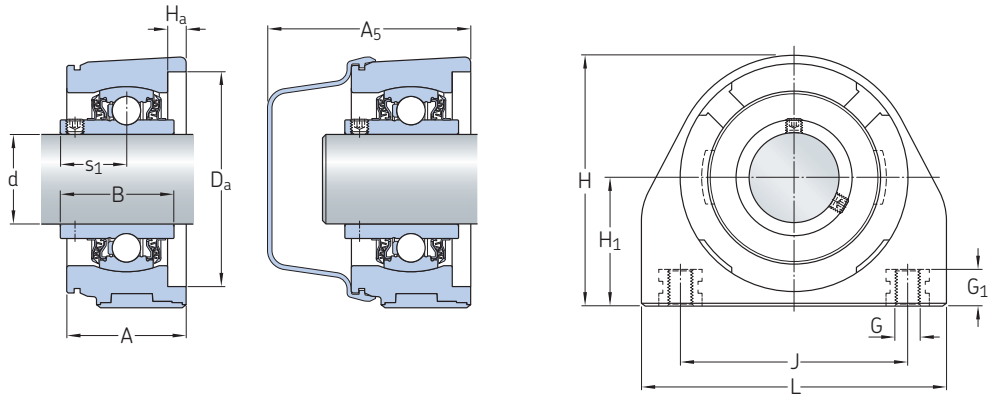

P2BTC (composite housing)

Principal dimensions			Basic load ratings dynamic	static	Fatigue load limit	Limiting speed with shaft tolerance h6	Mass	Designations Bearing unit	Associated end cover
d	H_1	J	C	C_0	P_u				
mm			kN		kN	r/min	kg	–	
20	33,3	51	10,8	6,55	0,28	5 000	0,25	**P2BTC 20M-TPSS**	ECB 504
	33,3	51	12,7	6,55	0,28	5 000	0,26	**P2BTC 20M-TPZM**	ECB 504
	33,3	50,8	10,8	6,55	0,28	5 000	0,48	**P2BTSS 20M-YTPSS**	ECW 204
25	36,5	51	11,9	7,8	0,335	4 300	0,32	**P2BTC 25M-TPSS**	ECB 505
	36,5	51	14	7,8	0,335	4 300	0,32	**P2BTC 25M-TPZM**	ECB 505
	36,5	50,8	11,9	7,8	0,335	4 300	0,65	**P2BTSS 25M-YTPSS**	ECW 205
30	42,9	76	16,3	11,2	0,475	3 800	0,5	**P2BTC 30M-TPSS**	ECB 506
	42,9	76	19,5	11,2	0,475	3 800	0,5	**P2BTC 30M-TPZM**	ECB 506
	42,9	82,6	16,3	11,2	0,475	3 800	1,25	**P2BTSS 30M-YTPSS**	ECW 206
35	47,6	82,5	21,6	15,3	0,655	3 200	0,66	**P2BTC 35M-TPSS**	ECB 507
	47,6	82,5	25,5	15,3	0,655	3 200	0,66	**P2BTC 35M-TPZM**	ECB 507
	47,6	82,6	21,6	15,3	0,655	3 200	1,45	**P2BTSS 35M-YTPSS**	ECW 207
40	49,2	89	24,7	19	0,8	2 800	0,85	**P2BTC 40M-TPSS**	ECB 508
	49,2	89	30,7	19	0,8	2 800	0,85	**P2BTC 40M-TPZM**	ECB 508
	49,2	88,9	24,7	19	0,8	2 800	1,9	**P2BTSS 40M-YTPSS**	ECW 208
50	57,2	101,5	29,6	23,2	0,98	2 200	1,05	**P2BTC 50M-TPSS**	ECB 510
	57,2	101,5	35,1	23,2	0,98	2 200	1,1	**P2BTC 50M-TPZM**	ECB 510

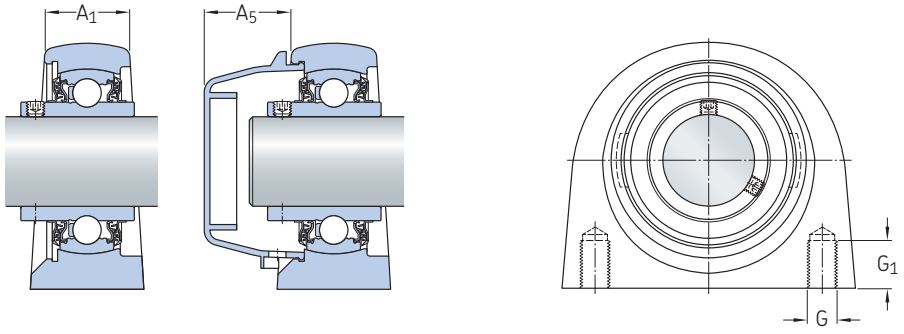

P2BTSS (stainless steel housing)

Dimensions

d	A	A_1	A_5	B	D_a	H	H_a	L	G	G_1	s_1
mm									–	mm	
20	36	–	63,1	31	52	64,6	6	75	M8	12	18,3
	36	–	63,1	31	52	64,6	6	75	M8	12	18,3
	29	23	24,5	31	–	63,5	–	66,5	M10	13	18,3
25	36	–	62,6	34,1	62	72,5	6	81	M10	12	19,8
	36	–	62,6	34,1	62	72,5	6	81	M10	12	19,8
	32	25	24,5	34,1	–	70	–	76	M10	13	19,8
30	40	–	68,1	38,1	72	84	6	102	M10	12	22,2
	40	–	68,1	38,1	72	84	6	102	M10	12	22,2
	38	29	29	38,1	–	82,5	–	98,5	M10	16	22,2
35	40	–	68,6	42,9	82	93,6	6	110	M10	12	25,4
	40	–	68,6	42,9	82	93,6	6	110	M10	12	25,4
	38	29	30,5	42,9	–	92	–	105	M12	19	25,4
40	44	–	73,9	49,2	88	98,2	6	117	M12	16	30,2
	44	–	73,9	49,2	88	98,2	6	117	M12	16	30,2
	41	33	31,5	49,2	–	100	–	114,5	M12	19	30,2
50	44	–	76	51,6	98	110,5	6	133	M16	21	32,6
	44	–	76	51,6	98	110,5	6	133	M16	21	32,6

1.9 Short base plummer block (tapped base pillow block) composite and stainless steel ball bearing units, inch shafts

d **3/4 – 1 1/4** in.
19,05 – 31,75 mm

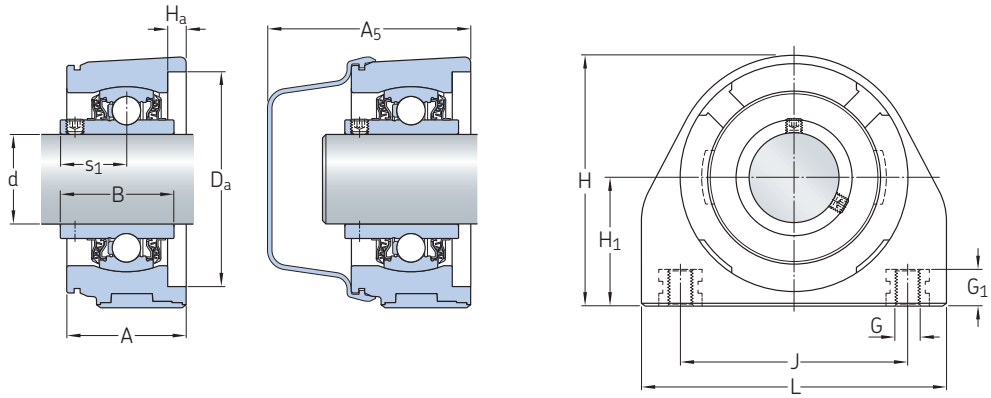

P2BTC (composite housing)

Principal dimensions			Basic load ratings dynamic	static	Fatigue load limit	Limiting speed with shaft tolerance h6	Mass	Designations Bearing unit	Associated end cover
d	H_1	J	C	C_0	P_u				
in./*mm*			lbf/*kN*		lbf/*kN*	r/min	lb/*kg*	–	
3/4	1.311	2.01	2 430	1 470	62.9	5 000	0.6	**P2BTC 012-TPSS**	ECB 504
19,05	*33,3*	*51*	*10,8*	*6,55*	*0,28*		*0,27*		
	1.311	2.01	2 860	1 470	62.9	5 000	0.6	**P2BTC 012-TPZM**	ECB 504
	33,3	*51*	*12,7*	*6,55*	*0,28*		*0,27*		
	1.311	2	2 430	1 470	62.9	5 000	1.1	**P2BTSS 012-YTPSS**	ECW 204
	33,3	*50,8*	*10,8*	*6,55*	*0,28*		*0,49*		
15/16	1.437	2.01	3 150	1 750	75.3	4 300	0.75	**P2BTC 015-TPZM**	ECB 505
23,813	*36,5*	*51*	*14*	*7,8*	*0,335*		*0,34*		
1	1.437	2.01	2 680	1 750	75.3	4 300	0.71	**P2BTC 100-TPSS**	ECB 505
25,4	*36.5*	*51*	*11,9*	*7,8*	*0,335*		*0,32*		
	1.437	2.01	3 150	1 750	75.3	4 300	0.71	**P2BTC 100-TPZM**	ECB 505
	36,5	*51*	*14*	*7,8*	*0,335*		*0,32*		
	1.437	2	2 680	1 750	75.3	4 300	1.45	**P2BTSS 100-YTPSS**	ECW 205
	36,5	*50,8*	*11,9*	*7,8*	*0,335*		*0,65*		
	1.689	2.99	3 660	2 520	107	3 800	1.1	**P2BTC 103-TPSS**	ECB 506
	42,9	*76*	*16,3*	*11,2*	*0,475*		*0,5*		
	1.689	2.99	4 380	2 520	107	3 800	1.1	**P2BTC 103-TPZM**	ECB 506
	42,9	*76*	*19,5*	*11,2*	*0,475*		*0,5*		
1 3/16	1.689	1.69	3 660	2 520	107	3 800	2.75	**P2BTSS 103-YTPSS**	ECW 206
30,163	*42,9*	*42,9*	*16,3*	*11,2*	*0,475*		*1,25*		
1 1/4	1.689	2.99	3 660	2 520	107	3 800	1.05	**P2BTC 104S-TPSS**	ECB 506
31,75	*42,9*	*76*	*16,3*	*11,2*	*0,475*		*0,47*		
	1.689	2.99	4 380	2 520	107	3 800	1.05	**P2BTC 104S-TPZM**	ECB 506
	42,9	*76*	*19,5*	*11,2*	*0,475*		*0,47*		
	1.689	1.69	3 660	2 520	107	3 800	2.65	**P2BTSS 104S-YTPSS**	ECW 206
	42,9	*42,9*	*16,3*	*11,2*	*0,475*		*1,2*		
	1.874	3.25	4 860	3 440	147	3 200	1.6	**P2BTC 104-TPSS**	ECB 507
	47,6	*82,5*	*21,6*	*15,3*	*0,655*		*0,72*		
	1.874	3.25	5 730	3 440	147	3 200	1.6	**P2BTC 104-TPZM**	ECB 507
	47,6	*82,5*	*25,5*	*15,3*	*0,655*		*0,72*		
	1.874	3.25	4 860	3 440	147	3 200	3.3	**P2BTSS 104-YTPSS**	ECW 207
	47,6	*82,6*	*21,6*	*15,3*	*0,655*		*1,5*		

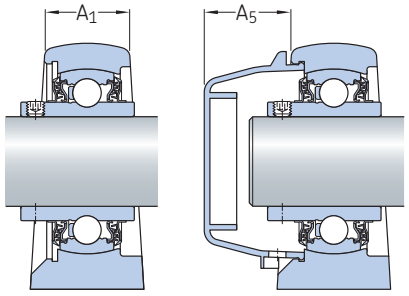

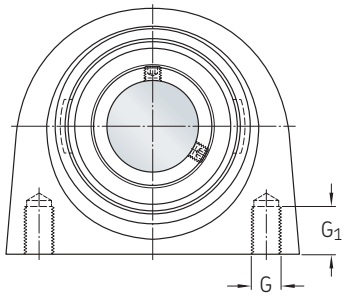

P2BTSS (stainless steel housing)

Dimensions

d	A	A_1	A_5	B	D_a	H	H_a	L	G	G_1	s_1
in./*mm*									–	in./*mm*	
3/4	1.42	–	2.48	1.22	2.05	2.54	0.24	2.95	3/8-16 UNC	0.47	0.72
19,05	*36*	–	*63,1*	*31*	*52*	*64,6*	*6*	*75*		*12*	*18,3*
	1.42	–	2.48	1.22	2.05	2.54	0.24	2.95	3/8-16 UNC	0.47	0.72
	36	–	*63,1*	*31*	*52*	*64,6*	*6*	*75*		*12*	*18,3*
	1.14	0.91	0.96	1.22	–	2.5	–	2.62	3/8-16 UNC	0.51	0.72
	29	*23*	*24,5*	*31*	–	*63,5*	–	*66,5*		*13*	*18,3*
15/16	1.42	–	2.46	1.34	2.44	2.85	0.24	3.19	3/8-16 UNC	0.47	0.78
23,813	*36*	–	*62,6*	*34,1*	*62*	*72,5*	*6*	*81*		*12*	*19,8*
1	1.42	–	2.46	1.34	2.44	2.85	0.24	3.19	3/8-16 UNC	0.47	0.78
25,4	*36*	–	*62,6*	*34,1*	*62*	*72,5*	*6*	*81*		*12*	*19,8*
	1.42	–	2.46	1.34	2.44	2.85	0.24	3.19	3/8-16 UNC	0.47	0.78
	36	–	*62,6*	*34,1*	*62*	*72,5*	*6*	*81*		*12*	*19,8*
	1.26	0.98	0.96	1.34	–	2.76	–	2.99	3/8-16 UNC	0.51	0.78
	32	*25*	*24,5*	*34,1*	–	*70*	–	*76*		*13*	*19,8*
1 3/16	1.57	–	2.68	1.5	2.83	3.31	0.24	4.02	7/16-14 UNC	0.47	0.87
30,163	*40*	–	*68,1*	*38,1*	*72*	*84*	*6*	*102*		*12*	*22,2*
	1.57	–	2.68	1.5	2.83	3.31	0.24	4.02	7/16-14 UNC	0.47	0.87
	40	–	*68,1*	*38,1*	*72*	*84*	*6*	*102*		*12*	*22,2*
	1.5	1.14	1.14	1.5	–	3.25	–	3.88	7/16-14 UNC	0.63	0.87
	38	*29*	*29*	*38,1*	–	*82,5*	–	*98,5*		*16*	*22,2*
1 1/4	1.57	–	2.68	1.5	2.83	3.31	0.24	4.02	7/16-14 UNC	0.47	0.87
31,75	*40*	–	*68,1*	*38,1*	*72*	*84*	*6*	*102*		*12*	*22,2*
	1.57	–	2.68	1.5	2.83	3.31	0.24	4.02	7/16-14 UNC	0.47	0.87
	40	–	*68,1*	*38,1*	*72*	*84*	*6*	*102*		*12*	*22,2*
	1.5	1.14	1.14	1.5	–	3.25	–	3.88	7/16-14 UNC	0.63	0.87
	38	*29*	*29*	*38,1*	–	*82,5*	–	*98,5*		*16*	*22,2*
	1.57	–	2.7	1.69	3.23	3.69	0.24	4.33	1/2-13 UNC	0.47	1
	40	–	*68,6*	*42,9*	*82*	*93,6*	*6*	*110*		*12*	*25,4*
	1.57	–	2.7	1.69	3.23	3.69	0.24	4.33	1/2-13 UNC	0.47	1
	40	–	*68,6*	*42,9*	*82*	*93,6*	*6*	*110*		*12*	*25,4*
	1.5	1.14	1.2	1.69	–	3.62	–	4.13	1/2-13 UNC	0.75	1
	38	*29*	*30,5*	*42,9*	–	*92*	–	*105*		*19*	*25,4*

1.9 Short base plummer block (tapped base pillow block) composite and stainless steel ball bearing units, inch shafts

d **1 3/8 – 1 15/16** in.
34,925 – 49,213 mm

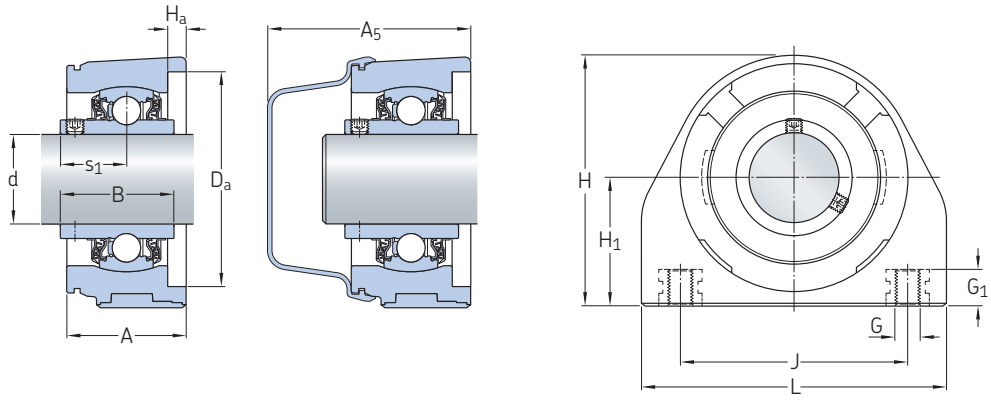

P2BTC (composite housing)

Principal dimensions			Basic load ratings dynamic	static	Fatigue load limit	Limiting speed with shaft tolerance h6	Mass	Designations Bearing unit	Associated end cover
d	H_1	J	C	C_0	P_u				
in./*mm*			lbf/*kN*		lbf/*kN*	r/min	lb/*kg*	–	
1 3/8	1.874	3.25	4 860	3 440	147	3 200	1.45	**P2BTC 106-TPSS**	ECB 507
34,925	*47,6*	*82,5*	*21,6*	*15,3*	*0,655*		*0,66*		
	1.874	3.25	5 730	3 440	147	3 200	1.5	**P2BTC 106-TPZM**	ECB 507
	47,6	*82,5*	*25,5*	*15,3*	*0,655*		*0,67*		
	1.874	3.25	4 860	3 440	147	3 200	3.2	**P2BTSS 106-YTPSS**	ECW 207
	47,6	*82,6*	*21,6*	*15,3*	*0,655*		*1,45*		
1 7/16	1.874	3.25	4 860	3 440	147	3 200	1.4	**P2BTC 107-TPSS**	ECB 507
36,513	*47,6*	*82,5*	*21,6*	*15,3*	*0,655*		*0,63*		
	1.874	3.25	5 730	3 440	147	3 200	1.5	**P2BTC 107-TPZM**	ECB 507
	47,6	*82,5*	*25,5*	*15,3*	*0,655*		*0,67*		
	1.874	3.25	4 860	3 440	147	3 200	3.2	**P2BTSS 107-YTPSS**	ECW 207
	47,6	*82,6*	*21,6*	*15,3*	*0,655*		*1,45*		
1 1/2	1.937	3.5	5 550	4 270	180	2 800	1.95	**P2BTC 108-TPSS**	ECB 508
38,1	*49,2*	*89*	*24,7*	*19*	*0,8*		*0,89*		
	1.937	3.5	6 900	4 270	180	2 800	1.95	**P2BTC 108-TPZM**	ECB 508
	49,2	*89*	*30,7*	*19*	*0,8*		*0,89*		
	1.937	3.5	5 550	4 270	180	2 800	4.2	**P2BTSS 108-YTPSS**	ECW 208
	49,2	*88,9*	*24,7*	*19*	*0,8*		*1,9*		
1 15/16	2.252	4	6 650	5 220	220	2 200	2.45	**P2BTC 115-TPSS**	ECB 510
49,213	*57,2*	*101,5*	*29,6*	*23,2*	*0,98*		*1,1*		
	2.252	4	7 890	5 220	220	2 200	2.45	**P2BTC 115-TPZM**	ECB 510
	57,2	*101,5*	*35,1*	*23,2*	*0,98*		*1,1*		

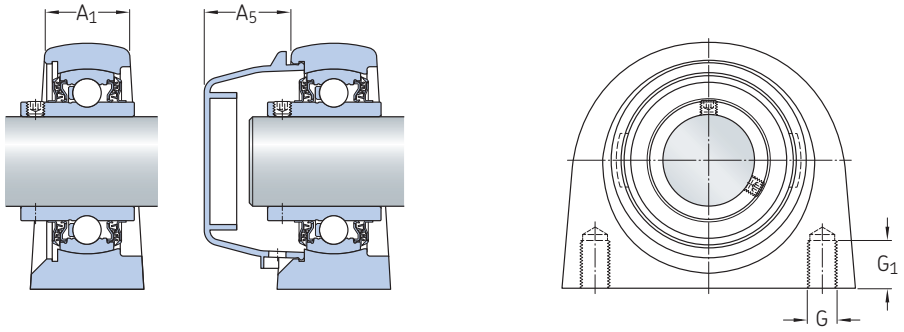

P2BTSS (stainless steel housing)

Dimensions

d	A	A_1	A_5	B	D_a	H	H_a	L	G	G_1	s_1
in./*mm*									–	in./*mm*	
1 3/8	1.57	–	2.7	1.69	3.23	3.69	0.24	4.33	1/2-13 UNC	0.47	1
34,925	*40*	–	*68,6*	*42,9*	*82*	*93,6*	*6*	*110*		*12*	*25,4*
	1.57	–	2.7	1.69	3.23	3.69	0.24	4.33	1/2-13 UNC	0.47	1
	40	–	*68,6*	*42,9*	*82*	*93,6*	*6*	*110*		*12*	*25,4*
	1.5	1.14	1.2	1.69	–	3.62	–	4.13	1/2-13 UNC	0.75	1
	38	*29*	*30,5*	*42,9*	–	*92*	–	*105*		*19*	*25,4*
1 7/16	1.57	–	2.7	1.69	3.23	3.69	0.24	4.33	1/2-13 UNC	0.47	1
36,513	*40*	–	*68,6*	*42,9*	*82*	*93,6*	*6*	*110*		*12*	*25,4*
	1.57	–	2.7	1.69	3.23	3.69	0.24	4.33	1/2-13 UNC	0.47	1
	40	–	*68,6*	*42,9*	*82*	*93,6*	*6*	*110*		*12*	*25,4*
	1.5	1.14	1.2	1.69	–	3.62	–	4.13	1/2-13 UNC	0.75	1
	38	*29*	*30,5*	*42,9*	–	*92*	–	*105*		*19*	*25,4*
1 1/2	1.73	–	2.91	1.94	3.46	3.87	0.24	4.61	1/2-13 UNC	0.47	1.19
38,1	*44*	–	*73,9*	*49,2*	*88*	*98,2*	*6*	*117*		*12*	*30,2*
	1.73	–	2.91	1.94	3.46	3.87	0.24	4.61	1/2-13 UNC	0.47	1.19
	44	–	*73,9*	*49,2*	*88*	*98,2*	*6*	*117*		*12*	*30,2*
	1.61	1.3	1.24	1.94	–	3.94	–	4.51	1/2-13 UNC	0.75	1.19
	41	*33*	*31,5*	*49,2*	–	*100*	–	*114,5*		*19*	*30,2*
1 15/16	1.73	–	2.99	2.03	3.86	4.35	0.24	5.24	5/8-11 UNC	0.83	1.28
49,213	*44*	–	*76*	*51,6*	*98*	*110,5*	*6*	*133*		*21*	*32,6*
	1.73	–	2.99	2.03	3.86	4.35	0.24	5.24	5/8-11 UNC	0.83	1.28
	44	–	*76*	*51,6*	*98*	*110,5*	*6*	*133*		*21*	*32,6*

1.10 Short base plummer block (tapped base pillow block) sealed composite ball bearing units (DFH), metric shafts

d **20 – 50** mm

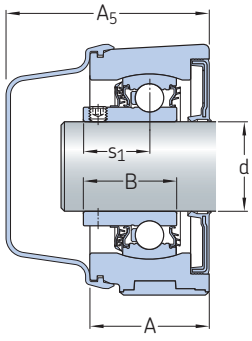

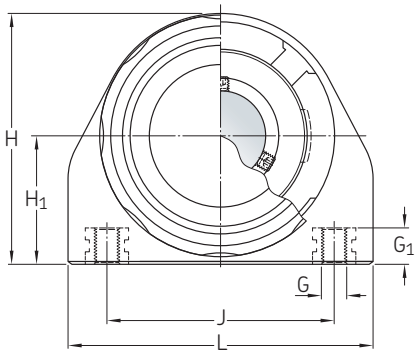

Principal dimensions			Basic load ratings dynamic	static	Fatigue load limit	Limiting speed with shaft tolerance h6	Mass	Designation
d	H_1	J	C	C_0	P_u			
mm			kN		kN	r/min	kg	–
20	33,3	51	10,8	6,55	0,28	5 000	0,27	**P2BTC 20M-CPSS-DFH**
25	36,5	51	11,9	7,8	0,335	4 300	0,34	**P2BTC 25M-CPSS-DFH**
30	42,9	76	16,3	11,2	0,475	3 800	0,52	**P2BTC 30M-CPSS-DFH**
35	47,6	82,5	21,6	15,3	0,655	3 200	0,68	**P2BTC 35M-CPSS-DFH**
40	49,2	89	24,7	19	0,8	2 800	0,86	**P2BTC 40M-CPSS-DFH**
50	57,2	101,5	29,6	23,2	0,98	2 200	1,1	**P2BTC 50M-CPSS-DFH**

Dimensions

d	A	A_5	B	H	L	G	G_1	s_1
mm						–	mm	
20	36	63,1	25,3	64,6	75	M8	12	18,3
25	36	62,6	27,3	72,5	81	M10	12	19,8
30	40	68,1	31,2	84	102	M10	12	22,2
35	40	68,6	34,9	93,6	110	M10	12	25,4
40	44	73,9	40,7	98,2	117	M12	16	30,2
50	44	76	43,6	110,5	133	M16	21	32,6

1.10 Short base plummer block (tapped base pillow block) sealed composite ball bearing units (DFH), inch shafts

d **3/4 – 1 15/16** in.
19,05 – 49,213 mm

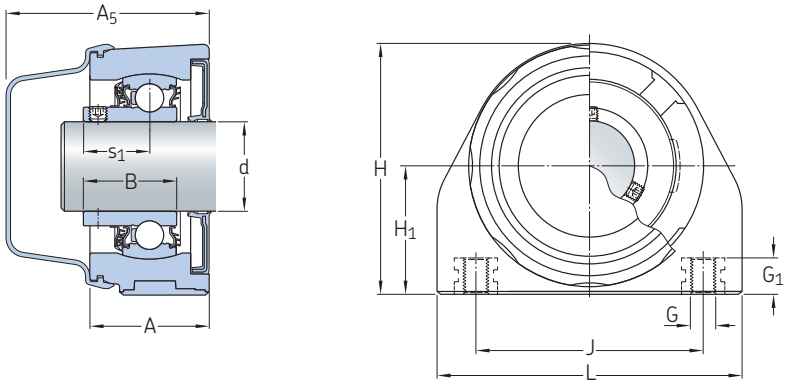

Principal dimensions			Basic load ratings dynamic	static	Fatigue load limit	Limiting speed with shaft tolerance h6	Mass	Designation
d	H_1	J	C	C_0	P_u			
in./*mm*			lbf/*kN*		lbf/*kN*	r/min	lb/*kg*	–
3/4 *19,05*	1.311 *33,3*	2.01 *51*	2 430 *10,8*	1 470 *6,55*	62.9 *0,28*	5 000	0.62 *0,28*	**P2BTC 012-CPSS-DFH**
1 *25,4*	1.437 *36,5*	2.01 *51*	2 680 *11,9*	1 750 *7,8*	75.3 *0,335*	4 300	0.75 *0,34*	**P2BTC 100-CPSS-DFH**
1 3/16 *30,163*	1.689 *42,9*	2.99 *76*	3 660 *16,3*	2 520 *11,2*	107 *0,475*	3 800	1.15 *0,52*	**P2BTC 103-CPSS-DFH**
1 1/4 *31,75*	1.689 *42,9*	2.99 *76*	3 660 *16,3*	2 520 *11,2*	107 *0,475*	3 800	1.1 *0,5*	**P2BTC 104S-CPSS-DFH**
	1.874 *47,6*	3.25 *82,5*	4 860 *21,6*	3 440 *15,3*	147 *0,655*	3 200	1.6 *0,73*	**P2BTC 104-CPSS-DFH**
1 3/8 *34,925*	1.874 *47,6*	3.25 *82,5*	4 860 *21,6*	3 440 *15,3*	147 *0,655*	3 200	1.5 *0,69*	**P2BTC 106-CPSS-DFH**
1 7/16 *36,513*	1.874 *47,6*	3.25 *82,5*	4 860 *21,6*	3 440 *15,3*	147 *0,655*	3 200	1.45 *0,66*	**P2BTC 107-CPSS-DFH**
1 1/2 *38,1*	1.937 *49,2*	3.5 *89*	5 550 *24,7*	4 270 *19*	180 *0,8*	2 800	1.95 *0,89*	**P2BTC 108-CPSS-DFH**
1 15/16 *49,213*	2.252 *57,2*	4 *101,5*	6 650 *29,6*	5 220 *23,2*	220 *0,98*	2 200	2.45 *1,1*	**P2BTC 115-CPSS-DFH**

Dimensions

d	A	A_5	B	H	L	G	G_1	s_1
in./*mm*						–	in./*mm*	
3/4 *19,05*	1.42 *36*	2.48 *63,1*	1 *25,3*	2.54 *64,6*	2.95 *75*	3/8-16 UNC	0.47 *12*	0.72 *18,3*
1 *25,4*	1.42 *36*	2.46 *62,6*	1.07 *27,3*	2.85 *72,5*	3.19 *81*	3/8-16 UNC	0.47 *12*	0.78 *19,8*
1 3/16 *30,163*	1.57 *40*	2.68 *68,1*	1.23 *31,2*	3.31 *84*	4.02 *102*	7/16-14 UNC	0.47 *12*	0.87 *22,2*
1 1/4 *31,75*	1.57 *40* 1.57 *40*	2.68 *68,1* 2.7 *68,6*	1.23 *31,2* 1.37 *34,9*	3.31 *84* 3.69 *93,6*	4.02 *102* 4.33 *110*	7/16-14 UNC 1/2-13 UNC	0.47 *12* 0.47 *12*	0.87 *22,2* 1 *25,4*
1 3/8 *34,925*	1.57 *40*	2.7 *68,6*	1.37 *34,9*	3.69 *93,6*	4.33 *110*	1/2-13 UNC	0.47 *12*	1 *25,4*
1 7/16 *36,513*	1.57 *40*	2.7 *68,6*	1.37 *34,9*	3.69 *93,6*	4.33 *110*	1/2-13 UNC	0.47 *12*	1 *25,4*
1 1/2 *38,1*	1.73 *44*	2.91 *73,9*	1.6 *40,7*	3.87 *98,2*	4.61 *117*	1/2-13 UNC	0.47 *12*	1.19 *30,2*
1 15/16 *49,213*	1.73 *44*	2.99 *76*	1.72 *43,6*	4.35 *110,5*	5.24 *133*	5/8-11 UNC	0.83 *21*	1.28 *32,6*

1.11 Take-up composite ball bearing units, metric shafts

d **20 – 50** mm

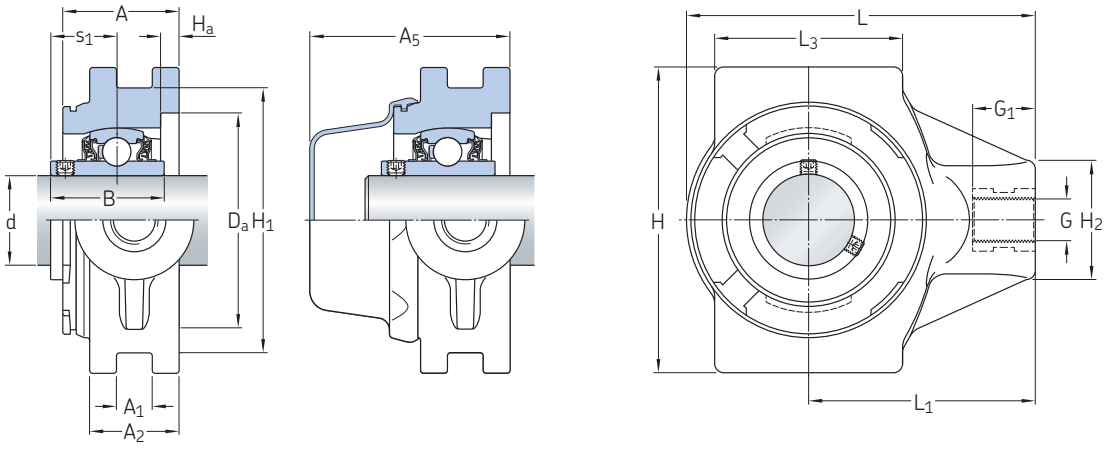

Principal dimensions				Basic load ratings dynamic	static	Fatigue load limit	Limiting speed with shaft tolerance h6	Mass	Designations Bearing unit	Associated end cover
d	H_1	A_1	G	C	C_0	P_u				
mm			–	kN		kN	r/min	kg	–	
20	75,8	12	M16	10,8	6,55	0,28	5 000	0,32	**WSTUC 20M-TPSS**	ECB 504
	75,8	12	M16	12,7	6,55	0,28	5 000	0,32	**WSTUC 20M-TPZM**	ECB 504
25	75,8	12	M16	11,9	7,8	0,335	4 300	0,36	**WSTUC 25M-TPSS**	ECB 505
	75,8	12	M16	14	7,8	0,335	4 300	0,36	**WSTUC 25M-TPZM**	ECB 505
30	88,8	12	M16	16,3	11,2	0,475	3 800	0,57	**WSTUC 30M-TPSS**	ECB 506
	88,8	12	M16	19,5	11,2	0,475	3 800	0,57	**WSTUC 30M-TPZM**	ECB 506
35	88,8	12	M16	21,6	15,3	0,655	3 200	0,69	**WSTUC 35M-TPSS**	ECB 507
	88,8	12	M16	25,5	15,3	0,655	3 200	0,69	**WSTUC 35M-TPZM**	ECB 507
40	101,8	16	M16	24,7	19	0,8	2 800	0,93	**WSTUC 40M-TPSS**	ECB 508
	101,8	16	M16	30,7	19	0,8	2 800	0,93	**WSTUC 40M-TPZM**	ECB 508
50	101,8	16	M20	29,6	23,2	0,98	2 200	1,1	**WSTUC 50M-TPSS**	ECB 510
	101,8	16	M20	35,1	23,2	0,98	2 200	1,1	**WSTUC 50M-TPZM**	ECB 510

Dimensions

d	A	A_2	A_5	B	D_a	H	H_2	H_a	L	L_1	L_3	G_1	s_1
mm													
20	33,5	25	60,4	31	52	89	36	6	95	64	47	21	18,3
	33,5	25	60,4	31	52	89	36	6	95	64	47	21	18,3
25	33,5	25	59,9	34,1	62	89	36	6	100	64	47	21	19,8
	33,5	25	59,9	34,1	62	89	36	6	100	64	47	21	19,8
30	39	30	67,1	38,1	72	103	40	6	117	76	63	21	22,2
	39	30	67,1	38,1	72	103	40	6	117	76	63	21	22,2
35	39	30	67,6	42,9	82	103	40	6	122	76	63	21	25,4
	39	30	67,6	42,9	82	103	40	6	122	76	63	21	25,4
40	41	32	70,9	49,2	88	113	46	6	134	85	80	21	30,2
	41	32	70,9	49,2	88	113	46	6	134	85	80	21	30,2
50	45	36	77	51,6	98	117	46	6	144	90	85	21	32,6
	45	36	77	51,6	98	117	46	6	144	90	85	21	32,6

1.11 Take-up composite ball bearing units, inch shafts

d **3/4 – 1 3/8** in.
19,05 – 34,925 mm

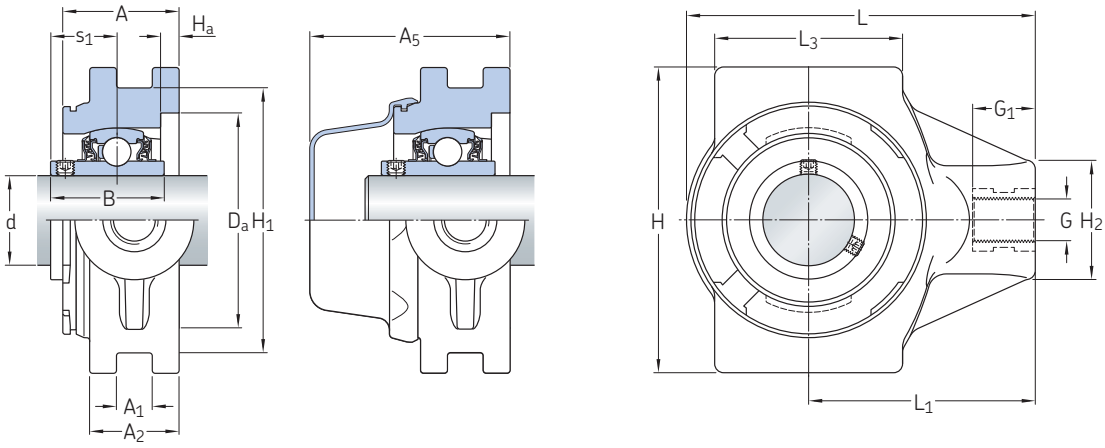

Principal dimensions				Basic load ratings dynamic	static	Fatigue load limit	Limiting speed with shaft tolerance h6	Mass	Designations Bearing unit	Associated end cover
d	H_1	A_1	G	C	C_0	P_u				
in./*mm*			–	ibf/*kN*		ibf/*kN*	r/min	lb/*kg*	–	
3/4	2.98	0.47	5/8-11 UNC	2 430	1 470	62.9	5 000	0.73	**WSTUC 012-TPSS**	ECB 504
19,05	*75,8*	*12*		*10,8*	*6,55*	*0,28*		*0,33*		
	2.98	0.47	5/8-11 UNC	2 860	1 470	62.9	5 000	0.73	**WSTUC 012-TPZM**	ECB 504
	75,8	*12*		*12,7*	*6,55*	*0,28*		*0,33*		
15/16	2.98	0.47	5/8-11 UNC	3 150	1 750	75.3	4 300	0.84	**WSTUC 015-TPZM**	ECB 505
23,813	*75,8*	*12*		*14*	*7,8*	*0,335*		*0,38*		
1	2.98	0.47	5/8-11 UNC	2 680	1 750	75.3	4 300	0.79	**WSTUC 100-TPSS**	ECB 505
25,4	*75,8*	*12*		*11,9*	*7,8*	*0,335*		*0,36*		
	2.98	0.47	5/8-11 UNC	3 150	1 750	75.3	4 300	0.79	**WSTUC 100-TPZM**	ECB 505
	75,8	*12*		*14*	*7,8*	*0,335*		*0,36*		
1 3/16	3.5	0.47	3/4-10 UNC	3 660	2 520	107	3 800	1.3	**WSTUC 103-TPSS**	ECB 506
30,163	*88,8*	*12*		*16,3*	*11,2*	*0,475*		*0,58*		
	3.5	0.47	3/4-10 UNC	4 380	2 520	107	3 800	1.25	**WSTUC 103-TPZM**	ECB 506
	88,8	*12*		*19,5*	*11,2*	*0,475*		*0,57*		
1 1/4	3.5	0.47	3/4-10 UNC	3 660	2 520	107	3 800	1.2	**WSTUC 104S-TPSS**	ECB 506
31,75	*88,8*	*12*		*16,3*	*11,2*	*0,475*		*0,55*		
	3.5	0.47	3/4-10 UNC	4 380	2 520	107	3 800	1.2	**WSTUC 104S-TPZM**	ECB 506
	88,8	*12*		*19,5*	*11,2*	*0,475*		*0,55*		
	3.5	0.47	3/4-10 UNC	4 860	3 440	147	3 200	1.65	**WSTUC 104-TPSS**	ECB 507
	88,8	*12*		*21,6*	*15,3*	*0,655*		*0,75*		
	3.5	0.47	3/4-10 UNC	5 730	3 440	147	3 200	1.65	**WSTUC 104-TPZM**	ECB 507
	88,8	*12*		*25,5*	*15,3*	*0,655*		*0,75*		
1 3/8	3.5	0.47	3/4-10 UNC	4 860	3 440	147	3 200	1.55	**WSTUC 106-TPSS**	ECB 507
34,925	*88,8*	*12*		*21,6*	*15,3*	*0,655*		*0,7*		
	3.5	0.47	3/4-10 UNC	5 730	3 440	147	3 200	1.55	**WSTUC 106-TPZM**	ECB 507
	88,8	*12*		*25,5*	*15,3*	*0,655*		*0,7*		

Dimensions

d	A	A_2	A_5	B	D_a	H	H_2	H_a	L	L_1	L_3	G_1	s_1
in./*mm*													
3/4	1.32	0.98	2.38	1.22	2.05	3.5	1.42	0.24	3.74	2.52	1.85	0.83	0.72
19,05	*33,5*	*25*	*60,4*	*31*	*52*	*89*	*36*	*6*	*95*	*64*	*47*	*21*	*18,3*
	1.32	0.98	2.38	1.22	2.05	3.5	1.42	0.24	3.74	2.52	1.85	0.83	0.72
	33,5	*25*	*60,4*	*31*	*52*	*89*	*36*	*6*	*95*	*64*	*47*	*21*	*18,3*
15/16	1.32	0.98	2.36	1.34	2.44	3.5	1.42	0.24	3.94	2.52	1.85	0.83	0.78
23,813	*33,5*	*25*	*59,9*	*34,1*	*62*	*89*	*36*	*6*	*100*	*64*	*47*	*21*	*19,8*
1	1.32	0.98	2.36	1.34	2.44	3.5	1.42	0.24	3.94	2.52	1.85	0.83	0.78
25,4	*33,5*	*25*	*59,9*	*34,1*	*62*	*89*	*36*	*6*	*100*	*64*	*47*	*21*	*19,8*
	1.32	0.98	2.36	1.34	2.44	3.5	1.42	0.24	3.94	2.52	1.85	0.83	0.78
	33,5	*25*	*59,9*	*34,1*	*62*	*89*	*36*	*6*	*100*	*64*	*47*	*21*	*19,8*
1 3/16	1.54	1.18	2.64	1.5	2.83	4.06	1.57	0.24	4.61	2.99	2.48	0.83	0.87
30,163	*39*	*30*	*67,1*	*38,1*	*72*	*103*	*40*	*6*	*117*	*76*	*63*	*21*	*22,2*
	1.54	1.18	2.64	1.5	2.83	4.06	1.57	0.24	4.61	2.99	2.48	0.83	0.87
	39	*30*	*67,1*	*38,1*	*72*	*103*	*40*	*6*	*117*	*76*	*63*	*21*	*22,2*
1 1/4	1.54	1.18	2.64	1.5	2.83	4.06	1.57	0.24	4.61	2.99	2.48	0.83	0.87
31,75	*39*	*30*	*67,1*	*38,1*	*72*	*103*	*40*	*6*	*117*	*76*	*63*	*21*	*22,2*
	1.54	1.18	2.64	1.5	2.83	4.06	1.57	0.24	4.61	2.99	2.48	0.83	0.87
	39	*30*	*67,1*	*38,1*	*72*	*103*	*40*	*6*	*117*	*76*	*63*	*21*	*22,2*
	1.54	1.18	2.66	1.69	3.23	4.06	1.57	0.24	4.8	2.99	2.48	0.83	1
	39	*30*	*67,6*	*42,9*	*82*	*103*	*40*	*6*	*122*	*76*	*63*	*21*	*25,4*
	1.54	1.18	2.66	1.69	3.23	4.06	1.57	0.24	4.8	2.99	2.48	0.83	1
	39	*30*	*67,6*	*42,9*	*82*	*103*	*40*	*6*	*122*	*76*	*63*	*21*	*25,4*
1 3/8	1.54	1.18	2.66	1.69	3.23	4.06	1.57	0.24	4.8	2.99	2.48	0.83	1
34,925	*39*	*30*	*67,6*	*42,9*	*82*	*103*	*40*	*6*	*122*	*76*	*63*	*21*	*25,4*
	1.54	1.18	2.66	1.69	3.23	4.06	1.57	0.24	4.8	2.99	2.48	0.83	1
	39	*30*	*67,6*	*42,9*	*82*	*103*	*40*	*6*	*122*	*76*	*63*	*21*	*25,4*

1.11 Take-up composite ball bearing units, inch shafts

d **1 7/16 – 1 15/16** in.
36,513 – 49,213 mm

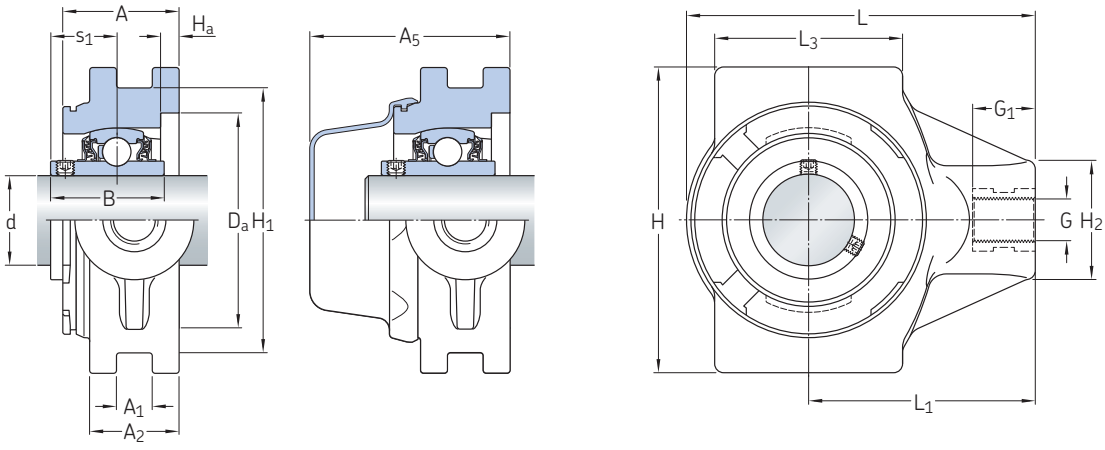

Principal dimensions				Basic load ratings dynamic	static	Fatigue load limit	Limiting speed with shaft tolerance h6	Mass	Designations Bearing unit	Associated end cover
d	H_1	A_1	G	C	C_0	P_u				
in./*mm*			–	ibf/*kN*		ibf/*kN*	r/min	lb/*kg*	–	
1 7/16	3.5	0.47	3/4-10 UNC	4 860	3 440	147	3 200	1.5	**WSTUC 107-TPSS**	ECB 507
36,513	*88,8*	*12*		*21,6*	*15,3*	*0,655*		*0,67*		
	3.5	0.47	3/4-10 UNC	5 730	3 440	147	3 200	1.55	**WSTUC 107-TPZM**	ECB 507
	88,8	*12*		*25,5*	*15,3*	*0,655*		*0,7*		
1 1/2	4.01	0.63	1"-8 UNC	5 550	4 270	180	2 800	2.15	**WSTUC 108-TPSS**	ECB 508
38,1	*101,8*	*16*		*24,7*	*19*	*0,8*		*0,98*		
	4.01	0.63	1"-8 UNC	6 900	4 270	180	2 800	2.2	**WSTUC 108-TPZM**	ECB 508
	101,8	*16*		*30,7*	*19*	*0,8*		*0,99*		
1 15/16	4.01	0.63	1"-8 UNC	6 650	5 220	220	2 200	2.55	**WSTUC 115-TPSS**	ECB 510
49,213	*101,8*	*16*		*29,6*	*23,2*	*0,98*		*1,15*		
	4.01	0.63	1"-8 UNC	7 890	5 220	220	2 200	2.55	**WSTUC 115-TPZM**	ECB 510

Dimensions

d	A	A_2	A_5	B	D_a	H	H_2	H_a	L	L_1	L_3	G_1	s_1
in./*mm*													
1 7/16	1.54	1.18	2.66	1.69	3.23	4.06	1.57	0.24	4.8	2.99	2.48	0.83	1
36,513	*39*	*30*	*67,6*	*42,9*	*82*	*103*	*40*	*6*	*122*	*76*	*63*	*21*	*25,4*
	1.54	1.18	2.66	1.69	3.23	4.06	1.57	0.24	4.8	2.99	2.48	0.83	1
	39	*30*	*67,6*	*42,9*	*82*	*103*	*40*	*6*	*122*	*76*	*63*	*21*	*25,4*
1 1/2	1.61	1.26	2.79	1.94	3.46	4.45	1.81	0.24	5.28	3.35	3.15	0.83	1.19
38,1	*41*	*32*	*70,9*	*49,2*	*88*	*113*	*46*	*6*	*134*	*85*	*80*	*21*	*30,2*
	1.61	1.26	2.79	1.94	3.46	4.45	1.81	0.24	5.28	3.35	3.15	0.83	1.19
	41	*32*	*70,9*	*49,2*	*88*	*113*	*46*	*6*	*134*	*85*	*80*	*21*	*30,2*
1 15/16	1.77	1.42	3.03	2.03	3.86	4.61	1.81	0.24	5.67	3.54	3.35	0.83	1.28
49,213	*45*	*36*	*77*	*51,6*	*98*	*117*	*46*	*6*	*144*	*90*	*85*	*21*	*32,6*
	1.77	1.42	3.03	2.03	3.86	4.61	1.81	0.24	5.67	3.54	3.35	0.83	1.28
	45	*36*	*77*	*51,6*	*98*	*117*	*46*	*6*	*144*	*90*	*85*	*21*	*32,6*

1.12 Take-up composite sealed ball bearing units (DFH), metric shafts

d **20 – 50** mm

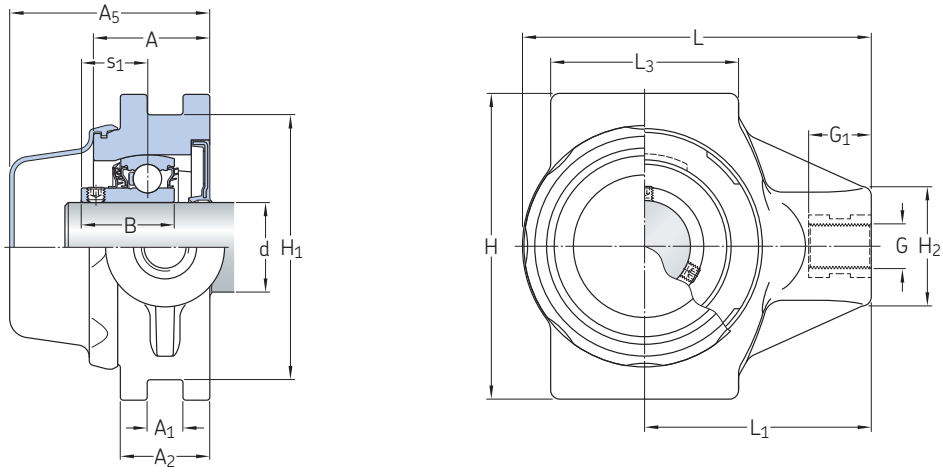

Principal dimensions				Basic load ratings dynamic	static	Fatigue load limit	Limiting speed with shaft tolerance h6	Mass	Designation
d	H_1	A_1	G	C	C_0	P_u			
mm			–	kN		kN	r/min	kg	–
20	75,8	12	M16	10,8	6,55	0,28	5 000	0,34	**WSTUC 20M-CPSS-DFH**
25	75,8	12	M16	11,9	7,8	0,335	4 300	0,38	**WSTUC 25M-CPSS-DFH**
30	88,8	12	M16	16,3	11,2	0,475	3 800	0,59	**WSTUC 30M-CPSS-DFH**
35	88,8	12	M16	21,6	15,3	0,655	3 200	0,71	**WSTUC 35M-CPSS-DFH**
40	101,8	16	M16	24,7	19	0,8	2 800	0,94	**WSTUC 40M-CPSS-DFH**
50	101,8	16	M20	29,6	23,2	0,98	2 200	1,15	**WSTUC 50M-CPSS-DFH**

Dimensions

d	A	A_2	A_5	B	H	H_2	L	L_1	L_3	G_1	s_1
mm											
20	33,5	25	60,4	25,3	89	36	95	64	47	21	18,3
25	33,5	25	59,9	27,3	89	36	100	64	47	21	19,8
30	39	30	67,1	31,2	103	40	117	76	63	21	22,2
35	39	30	67,6	34,9	103	40	122	76	63	21	25,4
40	41	32	70,9	40,7	113	46	134	85	80	21	30,2
50	45	36	77	43,6	117	46	144	90	85	21	32,6

1.12 Take-up composite sealed ball bearing units (DFH), inch shafts

d **3/4 – 1 15/16** in.
19,05 – 49,213 mm

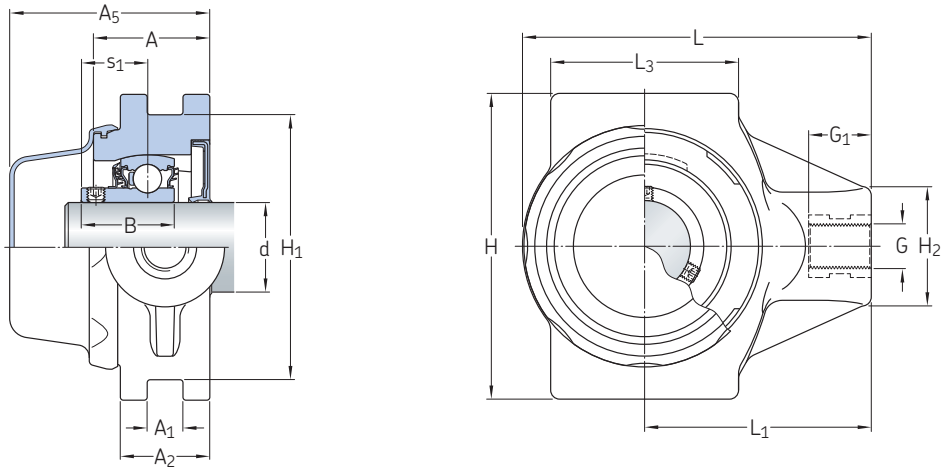

Principal dimensions				Basic load ratings dynamic	static	Fatigue load limit	Limiting speed with shaft tolerance h6	Mass	Designation
d	H_1	A_1	G	C	C_0	P_u			
in./*mm*			–	ibf/*kN*		ibf/*kN*	r/min	lb/*kg*	–
3/4	2.98	0.47	5/8-11 UNC	2 430	1 470	62.9	5 000	0.75	**WSTUC 012-CPSS-DFH**
19,05	*75,8*	*12*		*10,8*	*6,55*	*0,28*		*0,34*	
1	2.98	0.47	5/8-11 UNC	2 680	1 750	75.3	4 300	0.84	**WSTUC 100-CPSS-DFH**
25,4	*75,8*	*12*		*11,9*	*7,8*	*0,335*		*0,38*	
1 3/16	3.5	0.47	3/4-10 UNC	3 660	2 520	106.8	3 800	1.3	**WSTUC 103-CPSS-DFH**
30,163	*88,8*	*12*		*16,3*	*11,2*	*0,475*		*0,6*	
1 1/4	3.5	0.47	3/4-10 UNC	3 660	2 520	107	3 800	1.3	**WSTUC 104S-CPSS-DFH**
31,75	*88,8*	*12*		*16,3*	*11,2*	*0,475*		*0,58*	
	3.5	0.47	3/4-10 UNC	4 860	3 440	147	3 200	1.7	**WSTUC 104-CPSS-DFH**
	88,8	*12*		*21,6*	*15,3*	*0,655*		*0,76*	
1 3/8	3.5	0.47	3/4-10 UNC	4 860	3 440	147	3 200	1.6	**WSTUC 106-CPSS-DFH**
34,925	*88,8*	*12*		*21,6*	*15,3*	*0,655*		*0,72*	
1 7/16	3.5	0.47	3/4-10 UNC	4 860	3 440	147	3 200	1.5	**WSTUC 107-CPSS-DFH**
36,513	*88,8*	*12*		*21,6*	*15,3*	*0,655*		*0,69*	
1 1/2	4.01	0.63	1"-8 UNC	5 550	4 270	180	2 800	2.2	**WSTUC 108-CPSS-DFH**
38,1	*101,8*	*16*		*24,7*	*19*	*0,8*		*0,99*	
1 15/16	4.01	0.63	1"-8 UNC	6 650	5 220	220	2 200	2.55	**WSTUC 115-CPSS-DFH**
49,213	*101,8*	*16*		*29,6*	*23,2*	*0,98*		*1,15*	

Dimensions

d	A	A_2	A_5	B	H	H_2	L	L_1	L_3	G_1	s_1
in./*mm*											
3/4 *19,05*	1.32 *33,5*	0.98 *25*	2.38 *60,4*	1 *25,3*	3.5 *89*	1.42 *36*	3.74 *95*	2.52 *64*	1.85 *47*	0.83 *21*	0.72 *18,3*
1 *25,4*	1.32 *33,5*	0.98 *25*	2.36 *59,9*	1.07 *27,3*	3.5 *89*	1.42 *36*	3.94 *100*	2.52 *64*	1.85 *47*	0.83 *21*	0.78 *19,8*
1 3/16 *30,163*	1.54 *39*	1.18 *30*	2.64 *67,1*	1.23 *31,2*	4.06 *103*	1.57 *40*	4.61 *117*	2.99 *76*	2.48 *63*	0.83 *21*	0.87 *22,2*
1 1/4 *31,75*	1.54 *39* 1.54 *39*	1.18 *30* 1.18 *30*	2.64 *67,1* 2.66 *67,6*	1.23 *31,2* 1.37 *34,9*	4.06 *103* 4.06 *103*	1.57 *40* 1.57 *40*	4.61 *117* 4.8 *122*	2.99 *76* 2.99 *76*	2.48 *63* 2.48 *63*	0.83 *21* 0.83 *21*	0.87 *22,2* 1 *25,4*
1 3/8 *34,925*	1.54 *39*	1.18 *30*	2.66 *67,6*	1.37 *34,9*	4.06 *103*	1.57 *40*	4.8 *122*	2.99 *76*	2.48 *63*	0.83 *21*	1 *25,4*
1 7/16 *36,513*	1.54 *39*	1.18 *30*	2.66 *67,6*	1.37 *34,9*	4.06 *103*	1.57 *40*	4.8 *122*	2.99 *76*	2.48 *63*	0.83 *21*	1 *25,4*
1 1/2 *38,1*	1.61 *41*	1.26 *32*	2.79 *70,9*	1.6 *40,7*	4.45 *113*	1.81 *46*	5.28 *134*	3.35 *85*	3.15 *80*	0.83 *21*	1.19 *30,2*
1 15/16 *49,213*	1.77 *45*	1.42 *36*	3.03 *77*	1.72 *43,6*	4.61 *117*	1.81 *46*	5.67 *144*	3.54 *90*	3.35 *85*	0.83 *21*	1.28 *32,6*

1.13 Stainless steel and zinc-coated insert bearings, metric shafts

d **20 – 50** mm

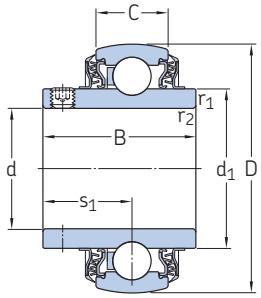

Principal dimensions							Basic load ratings dynamic	static	Fatigue load limit	Limiting speed with shaft tolerance h6	Mass	Designation
d	D	B	C	d_1 ≈	s_1	$r_{1,2}$ min.	C	C_0	P_u			
mm							kN		kN	r/min	kg	–
20	47	31	14	28,2	18,3	0,6	10,8	6,55	0,28	5 000	0,15	**YAR 204-2LPW/SS**
	47	31	14	28,2	18,3	0,6	12,7	6,55	0,28	5 000	0,15	**YAR 204-2LPW/ZM**
25	52	34,1	15	33,7	19,8	0,6	11,9	7,8	0,335	4 300	0,19	**YAR 205-2LPW/SS**
	52	34,1	15	33,7	19,8	0,6	14	7,8	0,335	4 300	0,19	**YAR 205-2LPW/ZM**
30	62	38,1	18	39,7	22,2	0,6	16,3	11,2	0,475	3 800	0,31	**YAR 206-2LPW/SS**
	62	38,1	18	39,7	22,2	0,6	19,5	11,2	0,475	3 800	0,31	**YAR 206-2LPW/ZM**
35	72	42,9	19	46,1	25,4	1	21,6	15,3	0,655	3 200	0,45	**YAR 207-2LPW/SS**
	72	42,9	19	46,1	25,4	1	25,5	15,3	0,655	3 200	0,45	**YAR 207-2LPW/ZM**
40	80	49,2	21	51,8	30,2	1	24,7	19	0,8	2 800	0,61	**YAR 208-2LPW/SS**
	80	49,2	21	51,8	30,2	1	30,7	19	0,8	2 800	0,61	**YAR 208-2LPW/ZM**
50	90	51,6	22	62,5	32,6	1	29,6	23,2	0,98	2 200	0,77	**YAR 210-2LPW/SS**
	90	51,6	22	62,5	32,6	1	35,1	23,2	0,98	2 200	0,77	**YAR 210-2LPW/ZM**

1.13 Stainless steel and zinc-coated insert bearings, metric shafts

d **3/4 – 1 15/16** in.
19,05 – 49,213 mm

Principal dimensions							Basic load ratings dynamic	static	Fatigue load limit	Limiting speed with shaft tolerance h6	Mass	Designation
d	D	B	C	d_1 ≈	s_1	$r_{1,2}$ min.	C	C_0	P_u			
in./*mm*							lbf/*kN*		lbf/*kN*	r/min	lb/*kg*	–
3/4	1.85	1.22	0.55	1.11	0.72	0.02	2 430	1 470	62.9	5 000	0.35	**YAR 204-012-2LPW/SS**
19,05	*47*	*31*	*14*	*28,2*	*18,3*	*0,6*	*10,8*	*6,55*	*0,28*		*0,16*	
	1.85	1.22	0.55	1.11	0.72	0.02	2 860	1 470	62.9	5 000	0.35	**YAR 204-012-2LPW/ZM**
	47	*31*	*14*	*28,2*	*18,3*	*0,6*	*12,7*	*6,55*	*0,28*		*0,16*	
15/16	2.05	1.34	0.59	1.33	0.78	0.02	3 150	1 750	75.3	4 300	0.46	**YAR 205-015-2LPW/ZM**
23,813	*52*	*34,1*	*15*	*33,74*	*19,8*	*0,6*	*14*	*7,8*	*0,335*		*0,21*	
1	2.05	1.34	0.59	1.33	0.78	0.02	2 680	1 750	75.3	4 300	0.42	**YAR 205-100-2LPW/SS**
25,4	*52*	*34,1*	*15*	*33,74*	*19,8*	*0,6*	*11,9*	*7,8*	*0,335*		*0,19*	
	2.05	1.34	0.59	1.33	0.78	0.02	3 150	1 750	75.3	4 300	0.42	**YAR 205-100-2LPW/ZM**
	52	*34,1*	*15*	*33,74*	*19,8*	*0,6*	*14*	*7,8*	*0,335*		*0,19*	
1 3/16	2.44	1.5	0.71	1.56	0.87	0.02	3 660	2 520	107	3 800	0.68	**YAR 206-103-2LPW/SS**
30,163	*62*	*38,1*	*18*	*39,7*	*22,2*	*0,6*	*16,3*	*11,2*	*0,475*		*0,31*	
	2.44	1.5	0.71	1.56	0.87	0.02	4 380	2 520	107	3 800	0.68	**YAR 206-103-2LPW/ZM**
	62	*38,1*	*18*	*39,7*	*22,2*	*0,6*	*19,5*	*11,2*	*0,475*		*0,31*	
1 1/4	2.44	1.5	0.71	1.56	0.87	0.02	3 660	2 520	107	3 800	0.62	**YAR 206-104-2LPW/SS**
31,75	*62*	*38,1*	*18*	*39,7*	*22,2*	*0,6*	*16,3*	*11,2*	*0,475*		*0,28*	
	2.44	1.5	0.71	1.56	0.87	0.02	4 380	2 520	107	3 800	0.64	**YAR 206-104-2LPW/ZM**
	62	*38,1*	*18*	*39,7*	*22,2*	*0,6*	*19,5*	*11,2*	*0,475*		*0,29*	
	2.83	1.69	0.75	1.81	1	0.04	4 860	3 440	147	3 200	1.1	**YAR 207-104-2LPW/SS**
	72	*42,9*	*19*	*46,1*	*25,4*	*1*	*21,6*	*15,3*	*0,655*		*0,51*	
	2.83	1.69	0.75	1.81	1	0.04	5 730	3 440	147	3 200	1.1	**YAR 207-104-2LPW/ZM**
	72	*42,9*	*19*	*46,1*	*25,4*	*1*	*25,5*	*15,3*	*0,655*		*0,51*	
1 3/8	2.83	1.69	0.75	1.81	1	0.04	4 860	3 440	147	3 200	0.99	**YAR 207-106-2LPW/SS**
34,925	*72*	*42,9*	*19*	*46,1*	*25,4*	*1*	*21,6*	*15,3*	*0,655*		*0,45*	
	2.83	1.69	0.75	1.81	1	0.04	5 730	3 440	147	3 200	1	**YAR 207-106-2LPW/ZM**
	72	*42,9*	*19*	*46,1*	*25,4*	*1*	*25,5*	*15,3*	*0,655*		*0,46*	
1 7/16	2.83	1.69	0.75	1.81	1	0.04	4 860	3 440	147	3 200	0.93	**YAR 207-107-2LPW/SS**
36,513	*72*	*42,9*	*19*	*46,1*	*25,4*	*1*	*21,6*	*15,3*	*0,655*		*0,42*	
	2.83	1.69	0.75	1.81	1	0.04	5 730	3 440	147	3 200	0.95	**YAR 207-107-2LPW/ZM**
	72	*42,9*	*19*	*46,1*	*25,4*	*1*	*25,5*	*15,3*	*0,655*		*0,43*	
1 1/2	3.15	1.94	0.83	2.04	1.19	0.04	5 550	4 270	180	2 800	1.45	**YAR 208-108-2LPW/SS**
38,1	*80*	*49,2*	*21*	*51,8*	*30,2*	*1*	*24,7*	*19*	*0,8*		*0,65*	
	3.15	1.94	0.83	2.04	1.19	0.04	6 900	4 270	180	2 800	1.45	**YAR 208-108-2LPW/ZM**
	80	*49,2*	*21*	*51,8*	*30,2*	*1*	*30,7*	*19*	*0,8*		*0,65*	
1 15/16	3.54	2.03	0.87	2.46	1.28	0.04	6 650	5 220	220	2 200	1.75	**YAR 210-115-2LPW/SS**
49,213	*90*	*51,6*	*22*	*62,51*	*32,6*	*1*	*29,6*	*23,2*	*0,98*		*0,79*	
	3.54	2.03	0.87	2.46	1.28	0.04	7 890	5 220	220	2 200	1.75	**YAR 210-115-2LPW/ZM**
	90	*51,6*	*22*	*62,51*	*32,6*	*1*	*35,1*	*23,2*	*0,98*		*0,8*	

SKF Food Line equivalent list, metric and inch shafts

Oval flanged **90**
SKF Food Line equivalent list – metric shafts. 90
SKF Food Line equivalent list – inch shafts 92

Square flanged **96**
SKF Food Line equivalent list – metric shafts. 96
SKF Food Line equivalent list – inch shafts 98

Plummer block **102**
SKF Food Line equivalent list – metric shafts. 102
SKF Food Line equivalent list – inch shafts 104

3-bolt flanged **108**
SKF Food Line equivalent list – metric shafts. 108
SKF Food Line equivalent list – inch shafts 110

Short base plummer block **112**
SKF Food Line equivalent list – metric shafts. 112
SKF Food Line equivalent list – inch shafts 114

Take-up **116**
SKF Food Line equivalent list – metric shafts. 116
SKF Food Line equivalent list – inch shafts 118

Oval flanged

	Housing	Insert bearing	Shaft diameter [mm] 20	25	30
SKF new	Composite	Zinc coated	**F2BC 20M-TPZM**	**F2BC 25M-TPZM**	**F2BC 30M-TPZM**
	Composite	Stainless steel	**F2BC 20M-TPSS**	**F2BC 25M-TPSS**	**F2BC 30M-TPSS**
	Stainless steel	Stainless steel	**F2BSS 20M-YTPSS**	**F2BSS 25M-YTPSS**	**F2BSS 30M-YTPSS**
SKF old	Composite	Zinc coated	**FYTWK 20 YTA**	**FYTWK 25 YTA**	**FYTWK 30 YTA**
	Composite	Stainless steel	**FYTWK 20 YTH**	**FYTWK 25 YTH**	**FYTWK 30 YTH**
	Stainless steel	Stainless steel	**FYTWR 20 YTHR**	**FYTWR 25 YTHR**	**FYTWR 30 YTHR**
NTN	Composite	Stainless steel	**F-UCFLR 204/LP03**	**F-UCFLR 205/LP03**	**F-UCFLR 206/LP03**
	Stainless steel	Stainless steel	**F-UCFM204/LP03**	**F-UCFM205/LP03**	**F-UCFM206/LP03**
INA	Composite	Stainless Steel	**RCJTY20-TV-VA**	**RCJTY25-TV-VA**	**RCJTY30-TV-VA**
NSK	Composite	Stainless steel	**PSFT20CR**	**PSFT25CR**	**PSFT30CR**
ASHAI	Composite	Stainless steel	**MUCD 204**	**MUCD 205**	**MUCD 206**
	Stainless steel	Stainless steel	**MUCFL 204**	**MUCFL 205**	**MUCFL 206**
FYH	Composite	Stainless steel	**UCVFL204S6**	**UCVFL205S6**	**UCVFL206S6**
	Composite	Plated bearing	**UCVFL204ES7**	**UCVFL205ES7**	**UCVFL206ES7**
	Stainless steel	Stainless steel	**UCSFL204H1S6**	**UCSFL205H1S6**	**UCSFL206H1S6**
DODGE	Composite	Stainless steel	**F2B-SCEZ-20M-PCR**	**F2B-SCEZ-25M-PCR**	**F2B-SCEZ-30M-PCR**
	Stainless steel	Stainless steel	**F2B-SCEZ-20M-SHCR**	**F2B-SCEZ-25M-SHCR**	**F2B-SCEZ-30M-SHCR**
MARBETT	Composite	Steel bearing	**UCFL 204 C**	**UCFL 205 C**	**UCFL 206 C**

Oval flanged

	Housing	Insert bearing	Shaft diameter [mm] 35	40	50
SKF new	Composite	Zinc coated	F2BC 35M-TPZM	F2BC 40M-TPZM	F2BC 50M-TPZM
	Composite	Stainless steel	F2BC 35M-TPSS	F2BC 40M-TPSS	F2BC 50M-TPSS
	Stainless steel	Stainless steel	F2BSS 35M-YTPSS	F2BSS 40M-YTPSS	–
SKF old	Composite	Zinc coated	FYTWK 35 YTA	FYTWK 40 LTA	FYTWK 50 LTA
	Composite	Stainless steel	FYTWK 35 YTH	FYTWK 40 LTHR	FYTWK 50 LTHR
	Stainless steel	Stainless steel	FYTWR 35 YTHR	FYTWR 40 YTHR	–
NTN	Composite	Stainless steel	F-UCFLR 207/LP03	F-UCFLR 208/LP03	–
	Stainless steel	Stainless steel	F-UCFM207/LP03	F-UCFM208/LP03	F-UCFM210/LP03
INA	Composite	Stainless Steel	RCJTY35-TV-VA	RCJTY40-TV-VA	RCJTY50TV-VA
NSK	Composite	Stainless steel	PSFT35CR	PSFT40CR	–
ASHAI	Composite	Stainless steel	MUCD 207	MUCD 208	MUCD 210
	Stainless steel	Stainless steel	MUCFL 207	MUCFL 208	MUCFL 210
FYH	Composite	Stainless steel	UCVFL207S6	UCVFL208S6	–
	Composite	Plated bearing	UCVFL207ES7	UCVFL208ES7	–
	Stainless steel	Stainless steel	UCSFL207H1S6	UCSFL208H1S6	UCSFL210H1S6
DODGE	Composite	Stainless steel	F2B-SCEZ-35M-PCR	F2B-SCBEZ-40M-PCR	F2B-SCEZ-50M-PCR
	Stainless steel	Stainless steel	F2B-SCEZ-35M-SHCR	F2B-SCBEZ-40M-SHCR	F2B-SCEZ-50M-SHCR
MARBETT	Composite	Steel bearing	UCFL 207 C	UCFL 208 C	–

SKF Food Line equivalent list – inch shafts

d **3/4 – 1 1/4** in.

Oval flanged

	Housing	Insert bearing	Shaft diameter [in.] 3/4	15/16	1
SKF new	Composite	Zinc coated	**F2BC 012-TPZM**	**F2BC 015-TPZM**	**F2BC 100-TPZM**
	Composite	Stainless steel	**F2BC 012-TPSS**	**–**	**F2BC 100-TPSS**
	Stainless steel	Stainless steel	**F2BSS 012-YTPSS**	**–**	**F2BSS 100-YTPSS**
SKF old	Composite	Zinc coated	**FYTWK 3/4 YTA**	**FYTWK 15/16 YTA**	**FYTWK 1. YTA**
	Composite	Stainless steel	**FYTWK 3/4 YTH**	**–**	**FYTWK 1. YTH**
	Stainless steel	Stainless steel	**FYTWR 3/4 YTHR**	**–**	**FYTWR 1. YTHR**
NTN	Composite	Stainless steel	**F-UCFLR 204-012/LP03**	**F-UCFLR 205-015/LP03**	**F-UCFLR 205-100/LP03**
	Stainless steel	Stainless steel	**F-UCFM 204-012/LP03**	**F-UCFM 205-015/LP03**	**F-UCFM 205-100/LP03**
NSK	Composite	Stainless steel	**PSFT3/4CR**	**–**	**PSFT1.CR**
SEALMASTER	Composite	Phosphorous nickel-coated	**CRFTC-PN12**	**–**	**CRFTC-PN16**
	Composite	Stainless steel (CR-XTREME)	**–**	**–**	**CRXFTC-16**
	Composite	Zinc dichromate coated bearing	**CF2S-Z212 NGF**	**–**	**CF2S-Z216 NGF**
	Composite	Stainless steel (CRES CS)	**CF2S-S212**	**–**	**CF2S-S216**
	Stainless steel	Stainless steel (CR-XTREME)	**–**	**–**	**CRXFTS-16**
	Stainless steel	Black-oxide	**SFT-12C CR**	**–**	**SFT-16C CR**
	Stainless steel	Phosphorous nickel-coated	**CRFTS-PN12**	**–**	**CRFTS-PN16**
	Stainless steel	Stainless steel (CRES SS)	**SF2S-S212**	**–**	**SF2S-S216**
FYH	Composite	Stainless steel	**UCVFL204-12S6**	**UCVFL205-15-S6**	**UCVFL205-16-S6**
	Composite	Plated bearing	**UCVFL204-12ES7**	**UCVFL205-15-ES7**	**UCVFL205-16-ES7**
	Stainless steel	Stainless steel	**UCSFL204-12H1S6**	**UCSFL205-15-H1S6**	**UCSFL205-16-H1S6**
DODGE	Composite	Stainless steel	**F2B-SCEZ-012-PCR**	**F2B-SCEZ-015-PCR**	**F2B-SCEZ-100-PCR**
	Composite				
	Stainless steel	Stainless steel	**F2B-SCEZ-012-SHCR**	**F2B-SCEZ-015-SHCR**	**F2B-SCEZ-100-SHCR**

Oval flanged

	Housing	Insert bearing	Shaft diameter [in.] 1 3/16	1 1/4	1 1/4
SKF new	Composite	Zinc coated	F2BC 103-TPZM	F4BC 104S-TPZM	F2BC 104-TPZM
	Composite	Stainless steel	F2BC 103-TPSS	F2BC 104S-TPSS	F2BC 104-TPSS
	Stainless steel	Stainless steel	F2BSS 103-YTPSS	F2BSS 104S-YTPSS	F2BSS 104-YTPSS
SKF old	Composite	Zinc coated	FYTWK 1.3/16 YTA	FYTWK 1.1/4 AYTA	FYTWK 1.1/4 YTA
	Composite	Stainless steel	FYTWK 1.3/16 YTH	FYTWK 1.1/4 AYTH	FYTWK 1.1/4 YTH
	Stainless steel	Stainless steel	FYTWR 1.3/16 YTHR	FYTWR 1.1/4 AYTHR	FYTWR 1.1/4 YTHR
NTN	Composite	Stainless steel	F-UCFLR 206-103/LP03	F-UCFLR 206-104/LP03	F-UCFLR 207-104/LP03
	Stainless steel	Stainless steel	F-UCFM 206-103/LP03	F-UCFM 206-104/LP03	F-UCFM 207-104/LP03
NSK	Composite	Stainless steel	PSFT1.3/16CR	PSFT1.1/4RCR	PSFT1.1/4CR
SEALMASTER	Composite	Phosphorous nickel-coated	CRFTC-PN19	CRFTC-PN20 R	CRFTC-PN20
	Composite	Stainless steel (CR-XTREME)	CRXFTC-19	CRXFTC-20R	CRXFTC-20
	Composite	Zinc dichromate coated bearing	CF2S-Z219 NGF	CF2S-Z220S NGF	CF2S-Z220 NGF
	Composite	Stainless steel (CRES CS)	CF2S-S219	CF2S-S220S	CF2S-S220
	Stainless steel	Stainless steel (CR-XTREME)	CRXFTS-19	CRXFTS-20R	CRXFTS-20
	Stainless steel	Black-oxide	SFT-19C CR	SFT-20RC CR	SFT-20C CR
	Stainless steel	Phosphorous nickel-coated	CRFTS-PN19	CRFTS-PN20 R	CRFTS-PN20
	Stainless steel	Stainless steel (CRES SS)	SF2S-S219	SF2S-S220S	SF2S-S220
FYH	Composite	Stainless steel	UCVFL206-19S6	UCVFL206-20S6	UCVFL207-20S6
	Composite	Plated bearing	UCVFL206-19ES7	UCVFL206-20ES7	UCVFL207-20ES7
	Stainless steel	Stainless steel	UCSFL206-19H1S6	UCSFL206-20H1S6	UCSFL207-20H1S6
DODGE	Composite	Stainless steel	F2B-SCEZ-103-PCR	F2B-SCEZ-104S-PCR	F2B-SCEZ-104-PCR
	Composite				
	Stainless steel	Stainless steel	F2B-SCEZ-103-SHCR	F2B-SCEZ-104S-SHCR	F2B-SCEZ-104-SHCR

SKF Food Line equivalent list – inch shafts

d **1 3/8 – 1 15/16** in.

Oval flanged

	Housing	Insert bearing	Shaft diameter [in.] 1 3/8	1 7/16
SKF new	Composite	Zinc coated	**F2BC 106-TPZM**	**F2BC 107-TPZM**
	Composite	Stainless steel	**F2BC 106-TPSS**	**F2BC 107-TPSS**
	Stainless steel	Stainless steel	**F2BSS 106-YTPSS**	**F2BSS 107-YTPSS**
SKF old	Composite	Zinc coated	**FYTWK 1.3/8 YTA**	**FYTWK 1.7/16 YTA**
	Composite	Stainless steel	**FYTWK 1.3/8 YTH**	**FYTWK 1.7/16 YTH**
	Stainless steel	Stainless steel	**FYTWR 1.3/8 YTHR**	**FYTWR 1.7/16 YTHR**
NTN	Composite	Stainless steel	**F-UCFLR 207-106/LP03**	**F-UCFLR 207-107/LP03**
	Stainless steel	Stainless steel	**F-UCFM 207-106/LP03**	**F-UCFM 207-107/LP03**
NSK	Composite	Stainless steel	**–**	**PSFT1.7/16CR**
SEALMASTER	Composite	Phosphorous nickel-coated	**–**	**CRFTC-PN23**
	Composite	Stainless steel (CR-XTREME)	**–**	**CRXFTC-23**
	Composite	Zinc dichromate coated bearing	**–**	**CF2S-Z223 NGF**
	Composite	Stainless steel (CRES CS)	**–**	**CF2S-S223**
	Stainless steel	Stainless steel (CR-XTREME)	**–**	**CRXFTS-23**
	Stainless steel	Black-oxide	**–**	**SFT-23C CR**
	Stainless steel	Phosphorous nickel-coated	**–**	**CRFTS-PN23**
	Stainless steel	Stainless steel (CRES SS)	**–**	**SF2S-S223**
FYH	Composite	Stainless steel	**UCVFL207-22S6**	**UCVFL207-23S6**
	Composite	Plated bearing	**UCVFL207-22ES7**	**UCVFL207-23ES7**
	Stainless steel	Stainless steel	**UCSFL207-22H1S6**	**UCSFL207-23H1S6**
DODGE	Composite	Stainless steel	**F2B-SCEZ-106-PCR**	**F2B-SCEZ-107-PCR**
	Composite			
	Stainless steel	Stainless steel	**F2B-SCEZ-106-SHCR**	**F2B-SCEZ-107-SHCR**

Oval flanged

	Housing	Insert bearing	Shaft diameter [in.] 1 1/2	1 15/16
SKF new	Composite	Zinc coated	F2BC 108-TPZM	F2BC 115-TPZM
	Composite	Stainless steel	F2BC 108-TPSS	F2BC 115-TPSS
	Stainless steel	Stainless steel	F2BSS 108-YTPSS	–
SKF old	Composite	Zinc coated	FYTWK 1.1/2 LTA	FYTWK 1.15/16 LTA
	Composite	Stainless steel	FYTWK 1.1/2 LTHR	FYTWK 1.15/16 LTHR
	Stainless steel	Stainless steel	FYTWR 1.1/2 YTHR	–
NTN	Composite	Stainless steel	F-UCFLR 208-108/LP03	–
	Stainless steel	Stainless steel	F-UCFM 208-108/LP03	F-UCFM 210-115/LP03
NSK	Composite	Stainless steel	PSFT1.1/2CR	–
SEALMASTER	Composite	Phosphorous nickel-coated	CRFTC-PN24	–
	Composite	Stainless steel (CR-XTREME)	CRXFTC-24	–
	Composite	Zinc dichromate coated bearing	CF2S-Z224 NGF	–
	Composite	Stainless steel (CRES CS)	CF2S-S224	–
	Stainless steel	Stainless steel (CR-XTREME)	CRXFTS-24	–
	Stainless steel	Black-oxide	SFT-24C CR	SFT-31C CR
	Stainless steel	Phosphorous nickel-coated	CRFTS-PN24	CRFTS-PN31
	Stainless steel	Stainless steel (CRES SS)	SF2S-S224	–
FYH	Composite	Stainless steel	UCVFL208-24S6	–
	Composite	Plated bearing	UCVFL208-24ES7	–
	Stainless steel	Stainless steel	UCSFL208-24H1S6	UCSFL210-31H1S6
DODGE	Composite	Stainless steel	F2B-SCEZ-108-PCR	F2B-SCEZ-115-PCR
	Composite			
	Stainless steel	Stainless steel	F2B-SCEZ-108-SHCR	F2B-SCEZ-115-SHCR

SKF Food Line equivalent list – metric shafts

d **20 – 50** mm

Square flanged

	Housing	Insert bearing	Shaft diameter [mm] 20	25	30
SKF new	Composite	Zinc coated	**F4BC 20M-TPZM**	**F4BC 25M-TPZM**	**F4BC 30M-TPZM**
	Composite	Stainless steel	**F4BC 20M-TPSS**	**F4BC 25M-TPSS**	**F4BC 30M-TPSS**
	Stainless steel	Stainless steel	**F4BSS 20M-YTPSS**	**F4BSS 25M-YTPSS**	**F4BSS 30M-YTPSS**
SKF old	Composite	Zinc coated	**FYWK 20 YTA**	**FYWK 25 YTA**	**FYWK 30 YTA**
	Composite	Stainless steel	**FYWK 20 YTH**	**FYWK 25 YTH**	**FYWK 30 YTH**
	Stainless steel	Stainless steel	**FYWR 20 YTHR**	**FYWR 25 YTHR**	**FYWR 30 YTHR**
INA	Composite	Stainless Steel	**RCJY20-TV-VA**	**RCJY25-TV-VA**	**RCJY30-TV-VA**
NSK	Composite	Stainless steel	**PSF20CR**	**PSF25CR**	**PSF30CR**
ASHAI	Composite	Stainless steel	**MUCB 204**	**MUCB 205**	**MUCB 206**
	Stainless steel	Stainless steel	**MUCF 204**	**MUCF 205**	**MUCF 206**
FYH	Composite	Stainless steel	**UCVF204S6**	**UCVF205S6**	**UCVF206S6**
	Composite	Plated bearing	**UCVF204ES7**	**UCVF205ES7**	**UCVF206ES7**
	Stainless steel	Stainless steel	**UCSF204H1S6**	**UCSF205H1S6**	**UCSF206H1S6**
DODGE	Composite	Stainless steel	**F4B-SCEZ-20M-PCR**	**F4B-SCEZ-25M-PCR**	**F4B-SCEZ-30M-PCR**
	Stainless steel	Stainless steel	**F4B-SCEZ-20M-SHCR**	**F4B-SCEZ-25M-SHCR**	**F4B-SCEZ-30M-SHCR**
MARBETT	Composite	Steel bearing	–	**UCF 205 C**	**UCF 206 C**

Square flanged

	Housing	Insert bearing	Shaft diameter [mm] 35	40	50
SKF new	Composite	Zinc coated	F4BC 35M-TPZM	F4BC 40M-TPZM	F4BC 50M-TPZM
	Composite	Stainless steel	F4BC 35M-TPSS	F4BC 40M-TPSS	F4BC 50M-TPSS
	Stainless steel	Stainless steel	F4BSS 35M-YTPSS	F4BSS 40M-YTPSS	–
SKF old	Composite	Zinc coated	FYWK 35 YTA	FYWK 40 YTA	FYWK 50 LTA
	Composite	Stainless steel	FYWK 35 YTH	FYWK 40 YTH	FYWK 50 LTHR
	Stainless steel	Stainless steel	FYWR 35 YTHR	FYWR 40 YTHR	–
INA	Composite	Stainless Steel	RCJY35-TV-VA	RCJY40-TV-VA	RCJY50TV-VA
NSK	Composite	Stainless steel	PSF35CR	PSF40CR	–
ASHAI	Composite	Stainless steel	MUCB 207	MUCB 208	MUCB 210
	Stainless steel	Stainless steel	MUCF 207	MUCF 208	MUCF 210
FYH	Composite	Stainless steel	UCVF207S6	UCVF208S6	–
	Composite	Plated bearing	UCVF207ES7	UCVF208ES7	–
	Stainless steel	Stainless steel	UCSF207H1S6	UCSF208H1S6	UCSF210H1S6
DODGE	Composite	Stainless steel	F4B-SCEZ-35M-PCR	F4B-SCEZ-40M-PCR	F4B-SCEZ-50M-PCR
	Stainless steel	Stainless steel	F4B-SCEZ-35M-SHCR	F4B-SCEZ-40M-SHCR	F4B-SCEZ-50M-SHCR
MARBETT	Composite	Steel bearing	UCF 207 C	UCF 208 C	UCF 210 C

SKF Food Line equivalent list – inch shafts

d **3/4 – 1 1/4** in.

Square flanged

	Housing	Insert bearing	Shaft diameter [in.] 3/4	15/16	1
SKF new	Composite	Zinc coated	**F4BC 012-TPZM**	**F4BC 015-TPZM**	**F4BC 100-TPZM**
	Composite	Stainless steel	**F4BC 012-TPSS**	**–**	**F4BC 100-TPSS**
	Stainless steel	Stainless steel	**F4BSS 012-YTPSS**	**–**	**F4BSS 100-YTPSS**
SKF old	Composite	Zinc coated	**FYWK 3/4 YTA**	**FYWK 15/16 YTA**	**FYWK 1. YTA**
	Composite	Stainless steel	**FYWK 3/4 YTH**	**–**	**FYWK 1. YTH**
	Stainless steel	Stainless steel	**FYWR 3/4 YTHR**	**–**	**FYWR 1. YTHR**
NSK	Composite	Stainless steel	**PSF3/4CR**	**–**	**PSF1.CR**
SEALMASTER	Composite	Phosphorous nickel-coated	**CRFC-PN12**	**–**	**CRFC-PN16**
	Composite	Stainless steel (CR-XTREME)	**–**	**–**	**CRXFC-16**
	Composite	Zinc dichromate coated bearing	**CF4S-Z212 NGF**	**–**	**CF4S-Z216 NGF**
	Composite	Stainless steel (CRES CS)	**CF4S-S212**	**–**	**CF4S-S216**
	Stainless steel	Stainless steel (CR-XTREME)		**–**	**CRXFS-16**
	Stainless steel	Black-oxide	**SF-12C CR**	**–**	**SF-16C CR**
	Stainless steel	Phosphorous nickel-coated	**CRFS-PN12**	**–**	**CRFS-PN16**
	Stainless steel	Stainless steel (CRES SS)	**SF4S-S212**	**–**	**SF4S-S216**
FYH	Composite	Stainless steel	**UCVF204-12S6**	**UCVF205-15-S6**	**UCVF205-16-S6**
	Composite	Plated bearing	**UCVF204-12ES7**	**UCVF205-15-ES7**	**UCVF205-16-ES7**
	Stainless steel	Stainless steel	**UCSF204-12H1S6**	**UCSF205-15-H1S6**	**UCSF205-16-H1S6**
DODGE	Composite	Stainless steel	**F4B-SCEZ-012-PCR**	**F4B-SCEZ-015-PCR**	**F4B-SCEZ-100-PCR**
	Stainless steel	Stainless steel	**F4B-SCEZ-012-SHCR**	**F4B-SCEZ-015-SHCR**	**F4B-SCEZ-100-SHCR**

Square flanged

	Housing	Insert bearing	Shaft diameter [in.] 1 3/16	1 1/4	1 1/4
SKF new	Composite	Zinc coated	F4BC 103-TPZM	F4BC 104S-TPZM	F4BC 104-TPZM
	Composite	Stainless steel	F4BC 103-TPSS	F4BC 104S-TPSS	F4BC 104-TPSS
	Stainless steel	Stainless steel	F4BSS 103-YTPSS	F4BSS 104S-YTPSS	F4BSS 104-YTPSS
SKF old	Composite	Zinc coated	FYWK 1.3/16 YTA	FYWK 1.1/4 AYTA	FYWK 1.1/4 YTA
	Composite	Stainless steel	FYWK 1.3/16 YTH	FYWK 1.1/4 AYTH	FYWK 1.1/4 YTH
	Stainless steel	Stainless steel	FYWR 1.3/16 YTHR	–	FYWR 1.1/4 AYTHR
NSK	Composite	Stainless steel	PSF1.3/16CR	PSF1.1/4RCR	PSF1.1/4CR
SEALMASTER	Composite	Phosphorous nickel-coated	CRFC-PN19	CRFC-PN20 R	CRFC-PN20
	Composite	Stainless steel (CR-XTREME)	CRXFC-19	CRXFC-20R	CRXFC-20
	Composite	Zinc dichromate coated bearing	CF4S-Z219 NGF	CF4S-Z220S NGF	CF4S-Z220 NGF
	Composite	Stainless steel (CRES CS)	CF4S-S219	CF4S-S220S	CF4S-S220
	Stainless steel	Stainless steel (CR-XTREME)	CRXFS-19	CRXFS-20R	CRXFS-20
	Stainless steel	Black-oxide	SF-19C CR	SF-20RC CR	SF-20C CR
	Stainless steel	Phosphorous nickel-coated	CRFS-PN19	CRFS-PN20 R	CRFS-PN20
	Stainless steel	Stainless steel (CRES SS)	SF4S-S219	SF4S-S220S	SF4S-S220
FYH	Composite	Stainless steel	UCVF206-19S6	UCVF206-20S6	UCVF207-20S6
	Composite	Plated bearing	UCVF206-19ES7	UCVF206-20ES7	UCVF207-20ES7
	Stainless steel	Stainless steel	UCSF206-19H1S6	UCSF206-20H1S6	UCSF207-20H1S6
DODGE	Composite	Stainless steel	F4B-SCEZ-103-PCR	F4B-SCEZ-104S-PCR	F4B-SCEZ-104-PCR
	Stainless steel	Stainless steel	F4B-SCEZ-103-SHCR	F4B-SCEZ-104S-SHCR	F4B-SCEZ-104-SHCR

SKF Food Line equivalent list – inch shafts

d **1 3/8 – 1 15/16** in.

Square flanged

	Housing	Insert bearing	Shaft diameter [in.] 1 3/8	1 7/16
SKF new	Composite	Zinc coated	**F4BC 106-TPZM**	**F4BC 107-TPZM**
	Composite	Stainless steel	**F4BC 106-TPSS**	**F4BC 107-TPSS**
	Stainless steel	Stainless steel	**F4BSS 106-YTPSS**	**F4BSS 107-YTPSS**
SKF old	Composite	Zinc coated	**FYWK 1.3/8 YTA**	**FYWK 1.7/16 YTA**
	Composite	Stainless steel	**FYWK 1.3/8 YTH**	**FYWK 1.7/16 YTH**
	Stainless steel	Stainless steel	**–**	**–**
NSK	Composite	Stainless steel	**–**	**PSF1.7/16CR**
SEALMASTER	Composite	Phosphorous nickel-coated	**–**	**CRFC-PN23**
	Composite	Stainless steel (CR-XTREME)	**–**	**CRXFC-23**
	Composite	Zinc dichromate coated bearing	**–**	**CF4S-Z223 NGF**
	Composite	Stainless steel (CRES CS)	**–**	**CF4S-S223**
	Stainless steel	Stainless steel (CR-XTREME)	**–**	**CRXFS-23**
	Stainless steel	Black-oxide	**–**	**SF-23C CR**
	Stainless steel	Phosphorous nickel-coated	**–**	**CRFS-PN23**
	Stainless steel	Stainless steel (CRES SS)	**–**	**SF4S-S223**
FYH	Composite	Stainless steel	**UCVF207-22S6**	**UCVF207-23S6**
	Composite	Plated bearing	**UCVF207-22ES7**	**UCVF207-23ES7**
	Stainless steel	Stainless steel	**UCSF207-22H1S6**	**UCSF207-23H1S6**
DODGE	Composite	Stainless steel	**F4B-SCEZ-106-PCR**	**F4B-SCEZ-107-PCR**
	Stainless steel	Stainless steel	**F4B-SCEZ-106-SHCR**	**F4B-SCEZ-107-SHCR**

Square flanged

	Housing	Insert bearing	Shaft diameter [in.] 1 1/2	1 15/16
SKF new	Composite	Zinc coated	F4BC 108-TPZM	F4BC 115-TPZM
	Composite	Stainless steel	F4BC 108-TPSS	F4BC 115-TPSS
	Stainless steel	Stainless steel	F4BSS 108-YTPSS	–
SKF old	Composite	Zinc coated	FYWK 1.1/2 YTA	FYWK 1.15/16 LTA
	Composite	Stainless steel	FYWK 1.1/2 YTH	FYWK 1.15/16 LTHR
	Stainless steel	Stainless steel	–	–
NSK	Composite	Stainless steel	PSF1.1/2CR	–
SEALMASTER	Composite	Phosphorous nickel-coated	CRFC-PN24	–
	Composite	Stainless steel (CR-XTREME)	CRXFC-24	–
	Composite	Zinc dichromate coated bearing	CF4S-Z224 NGF	–
	Composite	Stainless steel (CRES CS)	CF4S-S224	–
	Stainless steel	Stainless steel (CR-XTREME)	CRXFS-24	–
	Stainless steel	Black-oxide	SF-24C CR	SF-31C CR
	Stainless steel	Phosphorous nickel-coated	CRFS-PN24	CRFS-PN31
	Stainless steel	Stainless steel (CRES SS)	SF4S-S224	–
FYH	Composite	Stainless steel	UCVF208-24S6	–
	Composite	Plated bearing	UCVF208-24ES7	–
	Stainless steel	Stainless steel	UCSF208-24H1S6	UCSF210-31H1S6
DODGE	Composite	Stainless steel	F4B-SCEZ-108-PCR	F4B-SCEZ-115-PCR
	Stainless steel	Stainless steel	F4B-SCEZ-108-SHCR	F4B-SCEZ-115-SHCR

SKF Food Line equivalent list – metric shafts

d **20 – 50** mm

Plummer block

	Housing	Insert bearing	Shaft diameter [mm] 20	25	30
SKF new	Composite	Zinc coated	**P2BC 20M-TPZM**	**P2BC 25M-TPZM**	**P2BC 30M-TPZM**
	Composite	Stainless steel	**P2BC 20M-TPSS**	**P2BC 25M-TPSS**	**P2BC 30M-TPSS**
	Stainless steel	Stainless steel	**P2BSS 20M-YTPSS**	**P2BSS 25M-YTPSS**	**P2BSS 30M-YTPSS**
SKF old	Composite	Zinc coated	**SYWK 20 YTA**	**SYWK 25 YTA**	**SYWK 30 YTA**
	Composite	Stainless steel	**SYWK 20 YTH**	**SYWK 25 YTH**	**SYWK 30 YTH**
	Stainless steel	Stainless steel	**SYWR 20 YTHR**	**SYWR 25 YTHR**	**SYWR 30 YTHR**
NTN	Composite	Stainless steel	**F-UCPR 204/LP03**	**F-UCPR 205/LP03**	**F-UCPR 206/LP03**
	Stainless steel	Stainless steel	**F-UCPM204/LP03**	**F-UCPM205/LP03**	**F-UCPM206/LP03**
INA	Composite	Stainless steel	**RASEY20-TV-VA**	**RASEY25-TV-VA**	**RASEY30-TV-VA**
NSK	Composite	Stainless steel	**PNP20CR**	**PNP25CR**	**PNP30CR**
ASHAI	Composite	Stainless steel	**MUCA 204**	**MUCA 205**	**MUCA 206**
	Stainless steel	Stainless steel	**MUCP 204**	**MUCP 205**	**MUCP 206**
FYH	Composite	Stainless steel	**UCVP204S6**	**UCVP205S6**	**UCVP206S6**
	Composite	Plated bearing	**UCVP204ES7**	**UCVP205ES7**	**UCVP206ES7**
	Stainless steel	Stainless steel	**UCSP204H1S6**	**UCSP205H1S6**	**UCSP206H1S6**
DODGE	Composite	Stainless steel	**P2B-SCEZ-20M-PCR**	**P2B-SCEZ-25M-PCR**	**P2B-SCUEZ-30M-PCR**
	Stainless steel	Stainless steel	**P2B-SCEZ-20M-SHCR**	**P2B-SCEZ-25M-SHCR**	**P2B-SCEZ-30M-SHCR**

Plummer block

	Housing	Insert bearing	Shaft diameter [mm] 35	40	50
SKF new	Composite	Zinc coated	P2BC 35M-TPZM	P2BC 40M-TPZM	P2BC 50M-TPZM
	Composite	Stainless steel	P2BC 35M-TPSS	P2BC 40M-TPSS	P2BC 50M-TPSS
	Stainless steel	Stainless steel	P2BSS 35M-YTPSS	P2BSS 40M-YTPSS	–
SKF old	Composite	Zinc coated	SYWK 35 YTA	SYWK 40 YTA	SYWK 50 LTA
	Composite	Stainless steel	SYWK 35 YTH	SYWK 40 YTH	SYWK 50 LTHR
	Stainless steel	Stainless steel	SYWR 35 YTHR	SYWR 40 YTHR	–
NTN	Composite	Stainless steel	F-UCPR 207/LP03	F-UCPR 208/LP03	–
	Stainless steel	Stainless steel	F-UCPM207/LP03	F-UCPM208/LP03	F-UCPM210/LP03
INA	Composite	Stainless steel	RASEY35-TV-VA	RASEY40-TV-VA	RASEY50TV-VA
NSK	Composite	Stainless steel	PNP35CR	PNP40CR	–
ASHAI	Composite	Stainless steel	MUCA 207	MUCA 208	MUCA 210
	Stainless steel	Stainless steel	MUCP 207	MUCP 208	MUCP 210
FYH	Composite	Stainless steel	UCVP207S6	UCVP208S6	UCVP210S6
	Composite	Plated bearing	UCVP207ES7	UCVP208ES7	UCVP210ES7
	Stainless steel	Stainless steel	UCSP207H1S6	UCSP208H1S6	UCSP210H1S6
DODGE	Composite	Stainless steel	P2B-SCEZ-35M-PCR	P2B-SCBEZ-40M-PCR	P2B-SCEZ-50M-PCR
	Stainless steel	Stainless steel	P2B-SCEZ-35M-SHCR	P2B-SCBEZ-40M-SHCR	P2B-SCEZ-50M-SHCR

SKF Food Line equivalent list – inch shafts

d **3/4 – 1 1/4** in.

Plummer block

	Housing	Insert bearing	Shaft diameter [in.] 3/4	15/16	1
SKF new	Composite	Zinc coated	**P2BC 012-TPZM**	**P2BC 015-TPZM**	**P2BC 100-TPZM**
	Composite	Stainless steel	**P2BC 012-TPSS**	**–**	**P2BC 100-TPSS**
	Stainless steel	Stainless steel	**P2BSS 012-YTPSS**	**–**	**P2BSS 100-YTPSS**
SKF old	Composite	Zinc coated	**SYWK 3/4 YTA**	**SYWK 15/16 YTA**	**SYWK 1. YTA**
	Composite	Stainless steel	**SYWK 3/4 YTH**	**–**	**SYWK 1. YTH**
	Stainless steel	Stainless steel	**SYWR 3/4 YTHR**	**–**	**SYWR 1. YTHR**
NTN	Composite	Stainless steel	**F-UCPR 204-012/LP03**	**F-UCPR 205-015/LP03**	**F-UCPR 205-100/LP03**
	Stainless steel	Stainless steel	**F-UCPM 204-012/LP03**	**F-UCPM 205-015/LP03**	**F-UCPM 205-100/LP03**
NSK	Composite	Stainless steel	**PNP3/4CR**	**–**	**PNP1.CR**
SEALMASTER	Composite	Phosphorous nickel-coated	**CRPC-PN12**	**–**	**CRPC-PN16**
	Composite	Stainless steel (CR-XTREME)	**–**	**–**	**CRXPC-16**
	Composite	Zinc dichromate coated bearing	**CPS-Z212 NGF**	**–**	**CPS-Z216 NGF**
	Composite	Stainless steel (CRES CS)	**CPS-S212**	**–**	**CPS-S216**
	Stainless steel	Stainless steel (CR-XTREME)	**–**	**–**	**CRXPS-16**
	Stainless steel	Black-oxide	**NP-12C CR**	**–**	**NP-16C CR**
	Stainless steel	Phosphorous nickel-coated	**CRPS-PN12**	**–**	**CRPS-PN16**
	Stainless steel	Stainless steel (CRES SS)	**SPS-S212**	**–**	**SPS-S216**
FYH	Composite	Stainless steel	**UCVP204-12S6**	**UCVP205-15-S6**	**UCVP205-16-S6**
	Composite	Plated bearing	**UCVP204-12ES7**	**UCVP205-15-ES7**	**UCVP205-16-ES7**
	Stainless steel	Stainless steel	**UCSP204-12H1S6**	**UCSP205-15-H1S6**	**UCSP205-16-H1S6**
DODGE	Composite	Stainless steel	**P2B-SCEZ-012-PCR**	**P2B-SCEZ-015-PCR**	**P2B-SCEZ-100-PCR**
	Stainless steel	Stainless steel	**P2B-SCEZ-012-SHCR**	**P2B-SCEZ-015-SHCR**	**P2B-SCEZ-100-SHCR**

Plummer block

	Housing	Insert bearing	Shaft diameter [in.] 1 3/16	1 1/4	1 1/4
SKF new	Composite	Zinc coated	P2BC 103-TPZM	P2BC 104S-TPZM	P2BC 104-TPZM
	Composite	Stainless steel	P2BC 103-TPSS	P2BC 104S-TPSS	P2BC 104-TPSS
	Stainless steel	Stainless steel	P2BSS 103-YTPSS	P2BSS 104S-YTPSS	P2BSS 104-YTPSS
SKF old	Composite	Zinc coated	SYWK 1.3/16 YTA	SYWK 1.1/4 AYTA	SYWK 1.1/4 YTA
	Composite	Stainless steel	SYWK 1.3/16 YTH	SYWK 1.1/4 AYTH	SYWK 1.1/4 YTH
	Stainless steel	Stainless steel	SYWR 1.3/16 YTHR	SYWR 1.1/4 AYTHR	SYWR 1.1/4 YTHR
NTN	Composite	Stainless steel	F-UCPR 206-103/LP03	F-UCPR 206-104/LP03	F-UCPR 207-104/LP03
	Stainless steel	Stainless steel	F-UCPM 206-103/LP03	F-UCPM 206-104/LP03	F-UCPM 207-104/LP03
NSK	Composite	Stainless steel	PNP1.3/16CR	PNP1.1/4RCR	PNP1.1/4 CR
SEALMASTER	Composite	Phosphorous nickel-coated	CRPC-PN19	CRPC-PN20 R	CRPC-PN20
	Composite	Stainless steel (CR-XTREME)	CRXPC-19	CRXPC-20R	CRXPC-20
	Composite	Zinc dichromate coated bearing	CPS-Z219 NGF	CPS-Z220S NGF	CPS-Z220 NGF
	Composite	Stainless steel (CRES CS)	CPS-S219	CPS-S220S	CPS-S220
	Stainless steel	Stainless steel (CR-XTREME)	CRXPS-19	CRXPS-20R	CRXPS-20
	Stainless steel	Black-oxide	NP-19C CR	NP-20RC CR	NP-20C CR
	Stainless steel	Phosphorous nickel-coated	CRPS-PN19	CRPS-PN20 R	CRPS-PN20
	Stainless steel	Stainless steel (CRES SS)	SPS-S219	SPS-S220S	SPS-S220
FYH	Composite	Stainless steel	UCVP206-19S6	UCVP206-20S6	UCVP207-20S6
	Composite	Plated bearing	UCVP206-19ES7	UCVP206-20ES7	UCVP207-20ES7
	Stainless steel	Stainless steel	UCSP206-19H1S6	UCSP206-20H1S6	UCSP207-20H1S6
DODGE	Composite	Stainless steel	P2B-SCUEZ-103-PCR	P2B-SCUEZ-104S-PCR	P2B-SCEZ-104-PCR
	Stainless steel	Stainless steel	P2B-SCEZ-103-SHCR	P2B-SCUEZ-104S-SHCR	P2B-SCEZ-104-SHCR

SKF Food Line equivalent list – inch shafts

d **1 3/8 – 1 15/16** in.

Plummer block

	Housing	Insert bearing	Shaft diameter [in.] 1 3/8	1 7/16
SKF new	Composite	Zinc coated	**P2BC 106-TPZM**	**P2BC 107-TPZM**
	Composite	Stainless steel	**P2BC 106-TPSS**	**P2BC 107-TPSS**
	Stainless steel	Stainless steel	**P2BSS 106-YTPSS**	**P2BSS 107-YTPSS**
SKF old	Composite	Zinc coated	**SYWK 1.3/8 YTA**	**SYWK 1.7/16 YTA**
	Composite	Stainless steel	**SYWK 1.3/8 YTH**	**SYWK 1.7/16 YTH**
	Stainless steel	Stainless steel	**SYWR 1.3/8 YTHR**	**SYWR 1.7/16 YTHR**
NTN	Composite	Stainless steel	**F-UCPR 207-106/LP03**	**F-UCPR 207-107/LP03**
	Stainless steel	Stainless steel	**F-UCPM 207-106/LP03**	**F-UCPM 207-107/LP03**
NSK	Composite	Stainless steel	**–**	**PNP1.7/16CR**
SEALMASTER	Composite	Phosphorous nickel-coated	**–**	**CRPC-PN23**
	Composite	Stainless steel (CR-XTREME)	**–**	**CRXPC-23**
	Composite	Zinc dichromate coated bearing	**–**	**CPS-Z223 NGF**
	Composite	Stainless steel (CRES CS)	**–**	**CPS-S223**
	Stainless steel	Stainless steel (CR-XTREME)	**–**	**CRXPS-23**
	Stainless steel	Black-oxide	**–**	**NP-23C CR**
	Stainless steel	Phosphorous nickel-coated	**–**	**CRPS-PN23**
	Stainless steel	Stainless steel (CRES SS)	**–**	**SPS-S223**
FYH	Composite	Stainless steel	**UCVP207-22S6**	**UCVP207-23S6**
	Composite	Plated bearing	**UCVP207-22ES7**	**UCVP207-23ES7**
	Stainless steel	Stainless steel	**UCSP207-22H1S6**	**UCSP207-23H1S6**
DODGE	Composite	Stainless steel	**P2B-SCEZ-106-PCR**	**P2B-SCEZ-107-PCR**
	Stainless steel	Stainless steel	**P2B-SCEZ-106-SHCR**	**P2B-SCEZ-107-SHCR**

Plummer block

	Housing	Insert bearing	Shaft diameter [in.] 1 1/2	1 15/16
SKF new	Composite	Zinc coated	P2BC 108-TPZM	P2BC 115-TPZM
	Composite	Stainless steel	P2BC 108-TPSS	P2BC 115-TPSS
	Stainless steel	Stainless steel	P2BSS 108-YTPSS	–
SKF old	Composite	Zinc coated	SYWK 1.1/2 YTA	SYWK 1.15/16 LTA
	Composite	Stainless steel	SYWK 1.1/2 YTH	SYWK 1.15/16 LTHR
	Stainless steel	Stainless steel	SYWR 1.1/2 YTHR	–
NTN	Composite	Stainless steel	F-UCPR 208-108/LP03	–
	Stainless steel	Stainless steel	F-UCPM 208-108/LP03	F-UCPM 210-115/LP03
NSK	Composite	Stainless steel	PNP1.1/2CR	–
SEALMASTER	Composite	Phosphorous nickel-coated	CRPC-PN24	–
	Composite	Stainless steel (CR-XTREME)	CRXPC-24	–
	Composite	Zinc dichromate coated bearing	CPS-Z224 NGF	–
	Composite	Stainless steel (CRES CS)	CPS-S224	–
	Stainless steel	Stainless steel (CR-XTREME)	CRXPS-24	–
	Stainless steel	Black-oxide	NP-24C CR	NP-31C CR
	Stainless steel	Phosphorous nickel-coated	CRPS-PN24	CRPS-PN31
	Stainless steel	Stainless steel (CRES SS)	SPS-S224	–
FYH	Composite	Stainless steel	UCVP208-24S6	UCVP210-31S6
	Composite	Plated bearing	UCVP208-24ES7	UCVP210-31ES7
	Stainless steel	Stainless steel	UCSP208-24H1S6	UCSP210-31H1S6
DODGE	Composite	Stainless steel	P2B-SCBEZ-108-PCR	P2B-SCEZ-115-PCR
	Stainless steel	Stainless steel	P2B-SCEZ-108-SHCR	P2B-SCEZ-115-SHCR
				P2B-SCEZ-107-PCR
				P2B-SCEZ-107-SHCR

SKF Food Line equivalent list – metric shafts

d **20 – 50** mm

3-bolt flanged

	Housing	Insert bearing	Shaft diameter [mm] 20	25	30
SKF new	Composite	Zinc coated	**F3BBC 20M-TPZM**	**F3BBC 25M-TPZM**	**F3BBC 30M-TPZM**
	Composite	Stainless steel	**F3BBC 20M-TPSS**	**F3BBC 25M-TPSS**	**F3BBC 35M-TPSS**
	Stainless steel	Stainless steel	–	–	–
SKF old	Composite	Zinc coated	**FYAWK 20 LTA**	**FYAWK 25 LTA**	**FYAWK 30 LTA**
	Composite	Stainless steel	**FYAWK 20 LTHR**	**FYAWK 25 LTHR**	**FYAWK 30 LTHR**
	Stainless steel	Stainless steel	–	–	–
DODGE	Composite	Stainless steel	**FB-SCEZ-20M-PCR**	**FB-SCEZ-25M-PCR**	**FB-SCEZ-30M-PCR**

3-bolt flanged

	Housing	Insert bearing	Shaft diameter [mm] 35	40	50
SKF new	Composite	Zinc coated	**F3BBC 35M-TPZM**	**F3BBC 40M-TPZM**	**F3BBC 50M-TPZM**
	Composite	Stainless steel	**F3BBC 35M-TPSS**	**P2BTC 40M-TPSS**	**P2BTC 50M-TPSS**
	Stainless steel	Stainless steel	–	–	–
SKF old	Composite	Zinc coated	**FYAWK 35 LTA**	**FYAWK 40 LTA**	**FYAWK 50 LTA**
	Composite	Stainless steel	**FYAWK 35 LTHR**	**FYAWK 40 LTHR**	**FYAWK 50 LTHR**
	Stainless steel	Stainless steel	–	–	–
DODGE	Composite	Stainless steel	**FB-SCEZ-35M-PCR**	–	–

SKF Food Line equivalent list – inch shafts

d **3/4 – 1 1/4** in.

3-bolt flanged

	Housing	Insert bearing	Shaft diameter [in.] 3/4	15/16	1
SKF new	Composite	Zinc coated	**F3BBC 012-TPZM**	**F3BBC 015-TPZM**	**F3BBC 100-TPZM**
	Composite	Stainless steel	**F3BBC 012-TPSS**	**–**	**F3BBC 100-TPSS**
	Stainless steel	Stainless steel	**–**	**–**	**–**
SKF old	Composite	Zinc coated	**FYAWK 3/4 LTA**	**FYAWK 15/16 LTA**	**FYAWK 1. LTA**
	Composite	Stainless steel	**FYAWK 3/4 LTHR**	**–**	**FYAWK 1. LTHR**
	Stainless steel	Stainless steel	**–**	**–**	**–**
SEALMASTER	Stainless steel	Stainless steel (CR-XTREME)	**–**	**–**	**CRXFBS-16**
	Stainless steel	Black-oxide	**FB-12C CR**	**–**	**FB-16C CR**
	Stainless steel	Phosphorous nickel-coated	**CRFBS-PN12**	**–**	**CRFBS-PN16**
DODGE	Composite	Stainless steel	**FB-SCEZ-012-PCR**	**FB-SCEZ-015-PCR**	**FB-SCEZ-100-PCR**

SKF Food Line equivalent list – inch shafts

d **1 3/8 – 1 15/16** in.

3-bolt flanged

	Housing	Insert bearing	Shaft diameter [in.] 1 3/8	1 7/16
SKF new	Composite	Zinc coated	**F3BBC 106-TPZM**	**F3BBC 107-TPZM**
	Composite	Stainless steel	**F3BBC 107-TPSS**	**F3BBC 107-TPSS**
	Stainless steel	Stainless steel	**–**	**–**
SKF old	Composite	Zinc coated	**FYAWK 1.3/8 LTA**	**FYAWK 1.7/16 LTA**
	Composite	Stainless steel	**FYAWK 1.3/8 LTHR**	**FYAWK 1.7/16 LTHR**
	Stainless steel	Stainless steel	**–**	**–**
SEALMASTER	Stainless steel	Stainless steel (CR-XTREME)	**–**	**CRXFBS-23**
	Stainless steel	Black-oxide	**–**	**FB-23C CR**
	Stainless steel	Phosphorous nickel-coated	**–**	**CRFBS-PN23**
DODGE	Composite	Stainless steel	**FB-SCEZ-106-PCR**	**FB-SCEZ-107-PCR**

3-bolt flanged

	Housing	Insert bearing	Shaft diameter [in.] 1 3/16	1 1/4	1 1/4
SKF new	Composite	Zinc coated	F3BBC 103-TPZM	F3BBC 104S-TPZM	F3BBC 104-TPZM
	Composite	Stainless steel	F3BBC 103-TPSS	F3BBC 104S-TPSS	F3BBC 104-TPSS
	Stainless steel	Stainless steel	–	–	–
SKF old	Composite	Zinc coated	FYAWK 1.3/16 LTA	FYAWK 1.1/4 ALTA	FYAWK 1.1/4 LTA
	Composite	Stainless steel	FYAWK 1.3/16 LTHR	FYAWK 1.1/4 ALTHR	FYAWK 1.1/4 LTHR
	Stainless steel	Stainless steel	–	–	–
SEALMASTER	Stainless steel	Stainless steel (CR-XTREME)	CRXFBS-19	CRXFBS-20 R	CRXFBS-20
	Stainless steel	Black-oxide	FB-19C CR	FB-20RC CR	FB-20C CR
	Stainless steel	Phosphorous nickel-coated	CRFBS-PN19	CRFBS-PN20 R	CRFBS-PN20
DODGE	Composite	Stainless steel	FB-SCEZ-103-PCR	FB-SCEZ-104S-PCR	FB-SCEZ-104-PCR

3-bolt flanged

	Housing	Insert bearing	Shaft diameter [in.] 1 1/2	1 15/16
SKF new	Composite	Zinc coated	F3BBC 108-TPZM	F3BBC 015-TPZM
	Composite	Stainless steel	F3BBC 108-TPSS	F3BBC 115-TPSS
	Stainless steel	Stainless steel	–	–
SKF old	Composite	Zinc coated	FYAWK 1.1/2 LTA	FYAWK 1.15/16 LTA
	Composite	Stainless steel	FYAWK 1.1/2 LTHR	FYAWK 1.15/16 LTHR
	Stainless steel	Stainless steel	–	–
SEALMASTER	Stainless steel	Stainless steel (CR-XTREME)	–	–
	Stainless steel	Black-oxide	–	–
	Stainless steel	Phosphorous nickel-coated	–	–
DODGE	Composite	Stainless steel	–	–

SKF Food Line equivalent list – metric shafts

d **20 – 50** mm

Short base plummer block

	Housing	Insert bearing	Shaft diameter [mm] 20	25	30
SKF new	Composite	Zinc coated	**P2BTC 20M-TPZM**	**P2BTC 25M-TPZM**	**P2BTC 30M-TPZM**
	Composite	Stainless steel	**P2BTC 20M-TPSS**	**P2BTC 25M-TPSS**	**P2BTC 30M-TPSS**
	Stainless steel	Stainless steel	**P2BTSS 20M-YTPSS**	**P2BTSS 25M-YTPSS**	**P2BTSS 30M-YTPSS**
SKF old	Composite	Zinc coated	**SYFWK 20 LTA**	**SYFWK 25 LTA**	**SYFWK 30 LTA**
	Composite	Stainless steel	**SYFWK 20 LTHR**	**SYFWK 25 LTHR**	**SYFWK 30 LTHR**
	Stainless steel	Stainless steel	**SYFWR 20 YTHR**	**SYFWR 25 YTHR**	**SYFWR 30 YTHR**
INA	Composite	Stainless steel	**RSHEY20-TV-VA**	**RSHEY25-TV-VA**	**RSHEY30-TV-VA**
ASHAI	Stainless steel	Stainless steel	**MUCPA 204**	**MUCPA 205**	**MUCPA 206**
FYH	Stainless steel	Stainless steel	**UCSPA204H1S6**	**UCSPA205H1S6**	**UCSPA206H1S6**
DODGE	Composite	Stainless steel	**TB-SCEZ-20M-PCR**	**TB-SCEZ-25M-PCR**	**TB-SCEZ-30M-PCR**

Short base plummer block

	Housing	Insert bearing	Shaft diameter [mm] 35	40	50
SKF new	Composite	Zinc coated	P2BTC 35M-TPZM	P2BTC 40M-TPZM	P2BTC 50M-TPZM
	Composite	Stainless steel	P2BTC 35M-TPSS	P2BTC 40M-TPSS	P2BTC 50M-TPSS
	Stainless steel	Stainless steel	P2BTSS 35M-YTPSS	P2BTSS 40M-YTPSS	–
SKF old	Composite	Zinc coated	SYFWK 35 LTA	SYFWK 40 LTA	SYFWK 50 LTA
	Composite	Stainless steel	SYFWK 35 LTHR	SYFWK 40 LTHR	SYFWK 50 LTHR
	Stainless steel	Stainless steel	SYFWR 35 YTHR	SYFWR 40 YTHR	–
INA	Composite	Stainless steel	RSHEY35-TV-VA	RSHEY40-TV-VA	RSHEY50-TV-VA
ASHAI	Stainless steel	Stainless steel	MUCPA 207	MUCPA 208	MUCPA 210
FYH	Stainless steel	Stainless steel	UCSPA207H1S6	UCSPA208H1S6	–
DODGE	Composite	Stainless steel	TB-SCEZ-35M-PCR	TB-SCEZ-40M-PCR	TB-SCEZ-50M-PCR

SKF Food Line equivalent list – inch shafts

d **3/4 – 1 1/4** in.

Short base plummer block

	Housing	Insert bearing	Shaft diameter [in.] 3/4	15/16	1
SKF new	Composite	Zinc coated	**P2BTC 012-TPZM**	**P2BTC 015-TPZM**	**P2BTC 100-TPZM**
	Composite	Stainless steel	**P2BTC 012-TPSS**	–	**P2BTC 100-TPSS**
	Stainless steel	Stainless steel	**P2BTSS 012-YTPSS**	–	**P2BTSS 100-YTPSS**
SKF old	Composite	Zinc coated	**SYFWK 3/4 LTA**	**SYFWK 15/16 LTA**	**SYFWK 1. LTA**
	Composite	Stainless steel	**SYFWK 3/4 LTHR**	–	**SYFWK 1. LTHR**
	Stainless steel	Stainless steel	**SYFWR 3/4 YZTHR**	–	**SYFWR 1. YZTHR**
SEALMASTER	Composite	Phosphorous nickel-coated	**CRTBC-PN12**	–	**CRTBC-PN16**
	Composite	Stainless steel (CR-XTREME)	–	–	**CRXTBC-16**
	Composite	Zinc dichromate coated bearing	**CTBS-Z212 NGF**	–	**CTBS-Z216 NGF**
	Composite	Stainless steel (CRES CS)	**CTBS-S212**	–	**CTBS-S216**
	Stainless steel	Stainless steel (CRES CS)	**STBS-S212**	–	**STBS-S216**
FYH	Stainless steel	Stainless steel	**UCSPA204-12H1S6**	**UCSPA205-15-H1S6**	**UCSPA205-16-H1S6**
DODGE	Composite	Stainless steel	**TB-SCEZ-012-PCR**	**TB-SCEZ-015-PCR**	**TB-SCEZ-100-PCR**

SKF Food Line equivalent list – inch shafts

d **1 3/8 – 1 15/16** in.

Short base plummer block

	Housing	Insert bearing	Shaft diameter [in.] 1 3/8	1 7/16
SKF new	Composite	Zinc coated	**P2BTC 106-TPZM**	**P2BTC 107-TPZM**
	Composite	Stainless steel	**P2BTC 106-TPSS**	**P2BTC 107-TPSS**
	Stainless steel	Stainless steel	**P2BTSS 106-YTPSS**	**P2BTSS 107-YTPSS**
SKF old	Composite	Zinc coated	**SYFWK 1.3/8 LTA**	**SYFWK 1. 7/16 LTA**
	Composite	Stainless steel	**SYFWK 1.3/8 LTHR**	**SYFWK 1. 7/16 LTHR**
	Stainless steel	Stainless steel	**SYFWR 1.3/8 YZTHR**	**SYFWR 1. 7/16 YZTHR**
SEALMASTER	Composite	Phosphorous nickel-coated	–	**CRTBC-PN23**
	Composite	Stainless steel (CR-XTREME)	–	**CRXTBC-23**
	Composite	Zinc dichromate coated bearing	–	**CTBS-Z223 NGF**
	Composite	Stainless steel (CRES CS)	–	**CTBS-S223**
	Stainless steel	Stainless steel (CRES CS)	–	**STBS-S223**
FYH	Stainless steel	Stainless steel	**UCSPA207-22H1S6**	**UCSPA207-23H1S6**
DODGE	Composite	Stainless steel	**TB-SCEZ-106-PCR**	**TB-SCEZ-107-PCR**

Short base plummer block

	Housing	Insert bearing	Shaft diameter [in.] 1 3/16	1 1/4	1 1/4
SKF new	Composite	Zinc coated	P2BTC 103-TPZM	P2BTC 104S-TPZM	P2BTC 104-TPZM
	Composite	Stainless steel	P2BTC 103-TPSS	P2BTC 104S-TPSS	P2BTC 104-TPSS
	Stainless steel	Stainless steel	P2BTSS 103-YTPSS	P2BTSS 104S-YTPSS	P2BTSS 104-YTPSS
SKF old	Composite	Zinc coated	SYFWK 1.3/16 LTA	SYFWK 1.1/4 ALTA	SYFWK 1.1/4 LTA
	Composite	Stainless steel	SYFWK 1.3/16 LTHR	SYFWK 1.1/4 ALTHR	SYFWK 1.1/4 LTHR
	Stainless steel	Stainless steel	SYFWR 1.3/16 YZTHR	SYFWR 1.1/4 AYZTHR	SYFWR 1.1/4 YZTHR
SEALMASTER	Composite	Phosphorous nickel-coated	CRTBC-PN19	CRTBC-PN20 R	CRTBC-PN20
	Composite	Stainless steel (CR-XTREME)	CRXTBC-19	CRXTBC-20R	CRXTBC-20
	Composite	Zinc dichromate coated bearing	CTBS-Z219 NGF	CTBS-Z220S NGF	CTBS-Z220 NGF
	Composite	Stainless steel (CRES CS)	CTBS-S219	CTBS-S220S	CTBS-S220
	Stainless steel	Stainless steel (CRES CS)	STBS-S219	STBS-S220S	STBS-S220
FYH	Stainless steel	Stainless steel	UCSPA206-19H1S6	UCSPA206-20H1S6	UCSPA207-20H1S6
DODGE	Composite	Stainless steel	TB-SCEZ-103-PCR	TB-SCEZ-104S-PCR	TB-SCEZ-104-PCR

Short base plummer block

	Housing	Insert bearing	Shaft diameter [in.] 1 1/2	1 15/16
SKF new	Composite	Zinc coated	P2BTC 108-TPZM	P2BTC 115-TPZM
	Composite	Stainless steel	P2BTC 108-TPSS	P2BTC 115-TPSS
	Stainless steel	Stainless steel	P2BTSS 108-YTPSS	–
SKF old	Composite	Zinc coated	SYFWK 1.1/2 LTA	SYFWK 1.15/16 LTA
	Composite	Stainless steel	SYFWK 1.1/2 LTHR	SYFWK 1.15/16 LTHR
	Stainless steel	Stainless steel	SYFWR 1.1/2 YZTHR	–
SEALMASTER	Composite	Phosphorous nickel-coated	CRTBC-PN24	–
	Composite	Stainless steel (CR-XTREME)	CRXTBC-24	–
	Composite	Zinc dichromate coated bearing	CTBS-Z224 NGF	–
	Composite	Stainless steel (CRES CS)	CTBS-S224	–
	Stainless steel	Stainless steel (CRES CS)	STBS-S224	–
FYH	Stainless steel	Stainless steel	UCSPA208-24H1S6	–
DODGE	Composite	Stainless steel	–	–

SKF Food Line equivalent list – metric shafts

d **20 – 50** mm

Take-up

	Housing	Insert bearing	Shaft diameter [mm] 20	25	30
SKF new	Composite	Zinc coated	**WSTUC 20M-TPZM**	**WSTUC 25M-TPZM**	**WSTUC 30M-TPZM**
	Composite	Stainless steel	**WSTUC 20M-TPSS**	**WSTUC 25M-TPSS**	**WSTUC 30M-TPSS**
	Stainless steel	Stainless steel	–	–	–
SKF old	Composite	Zinc coated	**TUWK 20 LTA**	**TUWK 25 LTA**	**TUWK 30 LTA**
	Composite	Stainless steel	**TUWK 20 LTHR**	**TUWK 25 LTHR**	**TUWK 30 LTHR**
	Stainless steel	Stainless steel	–	–	–
INA	Composite	Stainless steel	**RTUEY20-TV-VA**	**RTUEY25-TV-VA**	**RTUEY30-TV-VA**
NSK	Composite	Stainless steel	**PST20CR**	**PST25CR**	**PST30CR**
ASHAI	Stainless steel	Stainless steel	**MUCT 204**	**MUCT 205**	**MUCT 206**
FYH	Stainless steel	Stainless steel	**UCST204H1S6**	**UCST205H1S6**	**UCST206H1S6**
DODGE	Composite	Stainless steel	**WSTU-SCEZ-20M-PCR**	**WSTU-SCEZ-25M-PCR**	**WSTU-SCEZ-30M-PCR**

Take-up

	Housing	Insert bearing	Shaft diameter [mm] 35	40	50
SKF new	Composite	Zinc coated	WSTUC 35M-TPZM	WSTUC 40M-TPZM	WSTUC 50M-TPZM
	Composite	Stainless steel	WSTUC 35M-TPSS	WSTUC 40M-TPSS	WSTUC 50M-TPSS
	Stainless steel	Stainless steel	–	–	–
SKF old	Composite	Zinc coated	TUWK 35 LTA	TUWK 40 LTA	TUWK 50 LTA
	Composite	Stainless steel	TUWK 35 LTHR	TUWK 40 LTHR	TUWK 50 LTHR
	Stainless steel	Stainless steel	–	–	–
INA	Composite	Stainless steel	RTUEY35-TV-VA	RTUEY40-TV-VA	RTUEY50TV-VA
NSK	Composite	Stainless steel	PST35CR	PST40CR	–
ASHAI	Stainless steel	Stainless steel	MUCT 207	MUCT 208	MUCT 210
FYH	Stainless steel	Stainless steel	UCST207H1S6	UCST208H1S6	UCST210H1S6
DODGE	Composite	Stainless steel	WSTU-SCEZ-35M-PCR	–	–

SKF Food Line equivalent list – inch shafts

d **3/4 – 1 1/4** in.

Take-up

	Housing	Insert bearing	Shaft diameter [in.] 3/4	15/16	1
SKF new	Composite	Zinc coated	**WSTUC 012-TPZM**	**WSTUC 015-TPZM**	**WSTUC 100-TPZM**
	Composite	Stainless steel	**WSTUC 012-TPSS**	**–**	**WSTUC 100-TPSS**
	Stainless steel	Stainless steel	**–**	**–**	**–**
SKF old	Composite	Zinc coated	**TUWK 3/4 LTA**	**TUWK 15/16 LTA**	**TUWK 1. LTA**
	Composite	Stainless steel	**TUWK 3/4 LTHR**	**–**	**TUWK 1. LTHR**
	Stainless steel	Stainless steel	**–**	**–**	**–**
NSK	Composite	Stainless steel	**PST3/4CR**	**–**	**PST1.CR**
FYH	Stainless steel	Stainless steel	**UCST204-12H1S6**	**UCST205-15-H1S6**	**UCST205-16-H1S6**
DODGE	Composite	Stainless steel	**WSTU-SCEZ-012-PCR**	**WSTU-SCEZ-015-PCR**	**WSTU-SCEZ-100-PCR**

SKF Food Line equivalent list – inch shafts

d **1 3/8 – 1 15/16** in.

Take-up

	Housing	Insert bearing	Shaft diameter [in.] 1 3/8	1 7/16
SKF new	Composite	Zinc coated	**WSTUC 106-TPZM**	**WSTUC 107-TPZM**
	Composite	Stainless steel	**WSTUC 106-TPSS**	**WSTUC 107-TPSS**
	Stainless steel	Stainless steel	**–**	**–**
SKF old	Composite	Zinc coated	**TUWK 1.3/8 LTA**	**TUWK 1.7/16 LTA**
	Composite	Stainless steel	**TUWK 1.3/8 LTHR**	**TUWK 1.7/16 LTHR**
	Stainless steel	Stainless steel	**–**	**–**
NSK	Composite	Stainless steel	**–**	**PST1.7/16CR**
FYH	Stainless steel	Stainless steel	**UCST207-22H1S6**	**UCST207-23H1S6**
DODGE	Composite	Stainless steel	**WSTU-SCEZ-106-PCR**	**WSTU-SCEZ-107-PCR**

Take-up

	Housing	Insert bearing	Shaft diameter [in.] 1 3/16	1 1/4	1 1/4
SKF new	Composite	Zinc coated	WSTUC 103-TPZM	WSTUC 104S-TPZM	WSTUC 104-TPZM
	Composite	Stainless steel	WSTUC 103-TPSS	WSTUC 104S-TPSS	WSTUC 104-TPSS
	Stainless steel	Stainless steel	–	–	–
SKF old	Composite	Zinc coated	TUWK 1.3/16 LTA	TUWK 1.1/4 ALTA	TUWK 1.1/4 LTA
	Composite	Stainless steel	TUWK 1.3/16 LTHR	TUWK 1.1/4 ALTHR	TUWK 1.1/4 LTHR
	Stainless steel	Stainless steel	–	–	–
NSK	Composite	Stainless steel	PST1.3/16CR	PST1.1/4RCR	PST1.1/4CR
FYH	Stainless steel	Stainless steel	UCST206-19H1S6	UCST206-20H1S6	UCST207-20H1S6
DODGE	Composite	Stainless steel	WSTU-SCEZ-103-PCR	WSTU-SCEZ-104S-PCR	WSTU-SCEZ-104-PCR

Take-up

	Housing	Insert bearing	Shaft diameter [in.] 1 1/2	1 15/16
SKF new	Composite	Zinc coated	WSTUC 108-TPZM	WSTUC 115-TPZM
	Composite	Stainless steel	WSTUC 108-TPSS	WSTUC 115-TPSS
	Stainless steel	Stainless steel	–	–
SKF old	Composite	Zinc coated	TUWK 1.1/2 LTA	TUWK 1.15/16 LTA
	Composite	Stainless steel	TUWK 1.1/2 LTHR	TUWK 1.15/16 LTHR
	Stainless steel	Stainless steel	–	–
NSK	Composite	Stainless steel	PST1.1/2CR	–
FYH	Stainless steel	Stainless steel	UCST208-24H1S6	UCST210-31H1S6
DODGE	Composite	Stainless steel	–	–

skf.com

® SKF is a registered trademark of the SKF Group.

DODGE is a trademark of ABB Motors and Mechanical Inc.

FYH is a trademark of Nippon Pillow Block Co, Ltd.

NSK is a trademark of NSK Ltd.

NTN is a trademark of NTN Bearing Corporation.

SEALMASTER is a trademark of Regal Beloit Americas, Inc.

© SKF Group 2018
The contents of this publication are the copyright of the publisher and may not be reproduced (even extracts) unless prior written permission is granted. Every care has been taken to ensure the accuracy of the information contained in this publication but no liability can be accepted for any loss or damage whether direct, indirect or consequential arising out of the use of the information contained herein.

PUB 65/P2 18157 EN · November 2018