MURR ELEKTRONIK
stay connected

VALVE PLUG SUPPRESSOR FORM A - 18MM

RC and LED, 110VAC/DC/25VA/W

Art.No.: 3124072
Weight: 0.042
Country of origin: CZ
Model designation: VBS-LEDY+RC 047/110 U

110 V AC/DC
RC + LED
Remove plug gasket when fitting adapter. Other LED colors on request.

Link to Product

Illustration



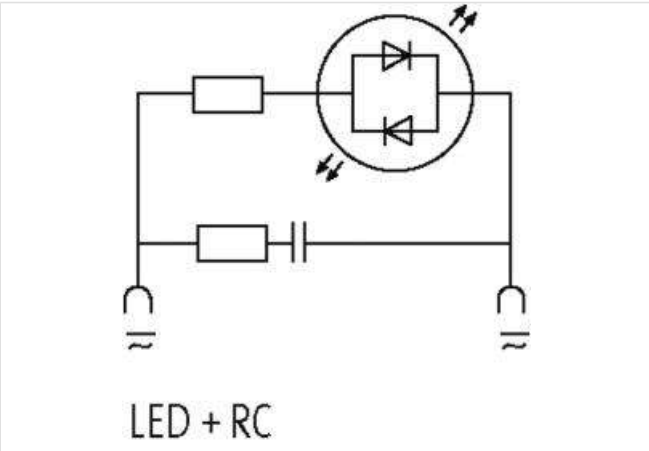

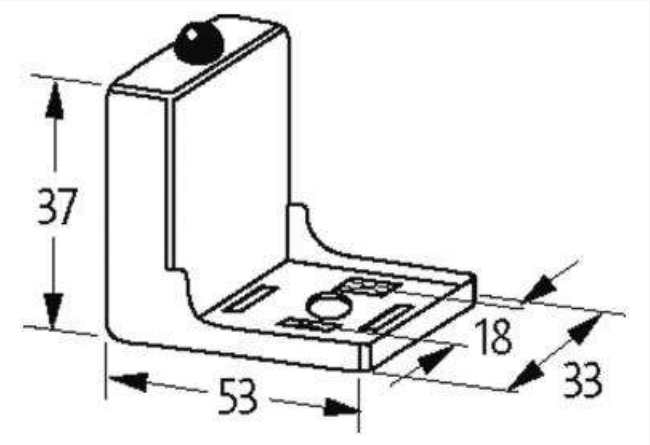

Product may differ from Image

Commercial data

ECLASS-6.0	27371013
ECLASS-6.1	27371013
ECLASS-7.0	27371013
ECLASS-8.0	27371013

The information in this Product-PDF has been compiled with the utmost care.
Liability for the correctness completeness and topicality of the information is restricted to gross negligence. Version: 2025-02-16

MURR ELEKTRONIK
stay connected

ECLASS-9.0	27371013
ECLASS-10.1	27371013
ECLASS-11.1	27371013
ECLASS-12.0	27371013
ETIM-5.0	EC000197
customs tariff number	85363010
GTIN	4048879012119
Packaging unit	1
Electrical data	
Drop-out delay time max.	20 ms
Holding power max.	25 W
Electrical data | Supply	
Cut-off peak voltage max.	250 V
Electrical data | Input	
Input voltage AC min.	48 V
Input voltage AC max.	150 V
Input voltage DC min.	48 V
Input voltage DC max.	150 V
Diagnostics	
Status indication LED	yellow
Device protection | Media	
Flame resistance	flame retardant
Mechanical data | Material data	
Coating contact	silver-plated
Color housing	black
Material housing	PA
Material contact	Bronze
Mechanical data | Mounting data	
Height	37 mm
Width	53 mm
Depth	33 mm
Environmental characteristics | Climatic	
Operating temperature min.	-20 °C
Operating temperature max.	60 °C
Housing temperature max. (EN 61347-2-13)	130 °C

The information in this Product-PDF has been compiled with the utmost care.
Liability for the correctness completeness and topicality of the information is restricted to gross negligence. Version: 2025-02-16