IF0311

Inductive sensor

IFK2004BAROA/SL/LS-100AK RT

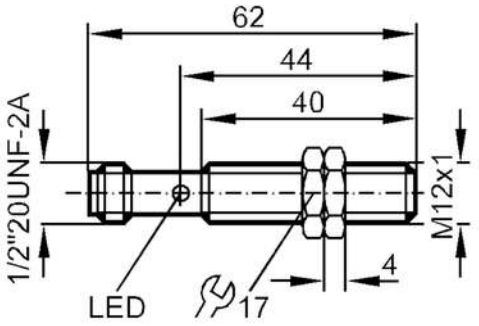

Product characteristics		
Output function		normally open
Sensing range	[mm]	4
Housing		threaded type
Dimensions	[mm]	M12 x 1
Application		
Special feature		Increased sensing range
Electrical data		
Frequency AC	[Hz]	47...63
Operating voltage	[V]	20...140 AC / 10...140 DC
Protection class		I
Reverse polarity protection		no
Outputs		
Output function		normally open
Max. voltage drop switching output DC	[V]	5
Max. voltage drop switching output AC	[V]	5
Minimum load current	[mA]	5
Max. leakage current	[mA]	0.8
Permanent current rating of switching output AC	[mA]	200
Permanent current rating of switching output DC	[mA]	200
Short-time current rating of switching output	[mA]	900; (20 ms / 0,5 Hz)
Switching frequency AC	[Hz]	25
Switching frequency DC	[Hz]	200
Short-circuit proof		no
Overload protection		no
Detection zone		
Sensing range	[mm]	4
Operating distance	[mm]	0...3.25
Increased sensing range		yes

IF0311

Inductive sensor

IFK2004BAROA/SL/LS-100AK RT

Accuracy / deviations			
Correction factor		steel: 1 / stainless steel: 0.7 / brass: 0.4 / aluminium: 0.3 / copper: 0.2	
Hysteresis	[% of Sr]	3...15	
Operating conditions			
Ambient temperature	[°C]	-25...70	
Protection		IP 67	
Tests / approvals			
EMC		EN 60947-5-2	
		EN 55011	class B
MTTF	[years]	999	
UL approval		Ta	0...40 °C
		Enclosure type	Type 1
		power supply	Hazardous voltage
		File number UL	E174191
Mechanical data			
Weight	[g]	31.2	
Housing		threaded type	
Mounting		flush mountable	
Dimensions	[mm]	M12 x 1	
Thread designation		M12 x 1	
Materials		brass white bronze coated; PBT	
Displays / operating elements			
Display		switching status	1 x LED, red
Electrical connection			
Required protection		miniature fuse to IEC60127-2 sheet 1; ≤ 2 A; fast acting	
Accessories			
Items supplied		lock nuts: 2	
Remarks			
Remarks		Recommendation: Check the safe functioning of the unit after a short circuit.	
Pack quantity		1 pcs.	

Electrical connection - plug

Connector: 1 x 1/2"; coding: C

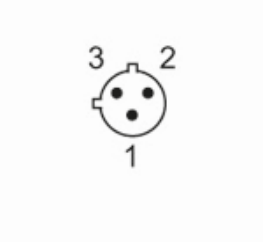

IF0311

Inductive sensor

IFK2004BAROA/SL/LS-100AK RT

Connection

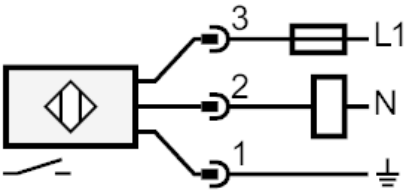

Note miniature fuse to IEC60127-2 sheet 1 ≤ 2 A fast acting